9th AUSTRALASIAN
FLUID MECHANICS CONFERENCE
AUCKLAND, 8-12 DECEMBER 1986

A Thick Viscous Sublayer Test Facility

L. W. B. BROWNE, W. K. CHAN and R. A. ANTONIA

Department of Mechanical Engineering, University of Newcastle, NSW 2308, Australia.

ABSTRACT

A unique thick viscous sublayer test facility using water flow in a large channel is described. The channel is the only known facility that allows detailed analysis of the near-wall region ($y+ < 50$) of a turbulent channel flow for a wide range of Reynolds numbers ($2800 < Re < 25000$). The viscous sub-layer thickness ($y+ = 5$) varies from 10.4 mm to 1.5 mm in this Reynolds number range. Thus it is possible to use a variety of measuring probes without having to resort to miniaturization. A single probe (for u), an X probe (for u and v) and a V probe (for u and w) have been used simultaneously in the flow. Experimental results for one Reynolds number (6590) are given and compared with other published results. Mean velocity profiles, the three turbulence components ($\overline{u^2}^{1/2}$, $\overline{v^2}^{1/2}$ and $\overline{w^2}^{1/2}$) profiles and the Reynolds shear stresses $-\overline{uv}$ and $-\overline{uw}$ profiles are presented. Work is continuing, particularly with regard to other Reynolds numbers and also the delineation of the flow structures in the near-wall region.

INTRODUCTION

In a turbulent flow over a surface the characteristics of the flow near the surface are distinctly different in character to that in the outer region, particularly with regard to the production and dissipation mechanisms; see for example Kline et al (1967), Corino and Brodkey (1969), Kim et al (1971), Grass (1971), Willmarth and Lu (1972) Wallace et al (1972), Ueda and Hinze (1975), Blackwelder and Eckelmann (1979), Kreplin and Eckelmann (1979), and Johansson and Alfredsson (1982). Of prime importance appears to be the regular structures, such as "bursts" and "sweeps", and the associated vortical motion that exist in the near wall region. These structures extend into the outer flow but appear to be strongest in the near wall region. It is possible that the origins of some of these structures are in this region. To obtain accurate measurements relating to these strucures it is therefore an advantage to have a viscous sublayer that is as thick as possible. Laboratory viscous sublayers are usually very thin, of the order of 0.1 mm, and normal size velocity measuring probes cannot discern any details of the sublayer flow. Eckelmann (1974) described a thick viscous sublayer facility using an oil channel 220 mm wide with an aspect ratio of 3.86. The maximum centre-line velocity attainable is 225 mm/s and this corresponds to a Reynolds number (Re), based on the channel half-width and the centre-line velocity, of 4100. For fully turbulent flow the minimum Reynolds number is about 2800 corresponding to a centre-line velocity of about 155 mm/s. The viscous length (corresponding to $y+ = 1$ where $y+ = yU_\tau/\nu$, y is the distance from the wall, U_τ is the friction velocity given by $U_\tau = \overline{U}(C_f/2)^{1/2}$, where $\overline{U}$ is the average flow velocity and C_f is the flow friction factor defined by the equation $\tau_w = C_f \frac{1}{2} \rho \overline{U}^2$, where τ_w is the wall shear stress, ρ the fluid density and ν the kinematic viscosity) is 0.76 mm for Re = 2800 and 0.52 mm for Re = 4100.

Here we describe an experimental facility that consists of a water channel of width 600 mm with an aspect ratio of 4.1 in which the Reynolds number can be varied from 2800 to 25000. The corresponding viscous length varies from 2.1 mm to 0.3 mm i.e at any particular Reynolds number, the viscous sublayer is about 2.8 times thicker than the viscous sublayer of the Eckelmann channel. Even at the highest Reynolds number the viscous length is still quite large. Perhaps of even more importance is the fact that we can attain such high Reynolds numbers compared to the Eckelmann channel. On the other hand, the velocities are lower and the time scales are larger leading to more difficulty with the velocity measurements over a longer period of time. The centre-line velocity in the water channel at Re = 2800 is only 9 mm/s while at Re = 25000 it is 85 mm/s.

A general description of the test facility is given together with the results obtained for Re = 6590. The results include a mean velocity profile, profiles of the turbulence quantities $\overline{u^2}^{1/2}$, $\overline{v^2}^{1/2}$, and $\overline{w^2}^{1/2}$ and profiles of the Reynolds stresses $-\overline{uv}$ and $-\overline{uw}$. The data is currently being assessed for the information it contains concerning the structures in the flow.

DESCRIPTION OF THE WATER CHANNEL

An existing water flume 3.6 m wide, 2.6 m deep and 36 m long was utilised. This flume has large storage tanks at either end, see Figure 1, and a centrifugal pump driven by a 22KW motor transfers water from one tank to the other with a resulting flow through the channel.

The channel, of width 600 mm and depth 2.4 m, was constructed inside this flume by using a galvanised metal frame and attaching 12 mm thick compressed asbestos sheets to the frame. A floor was provided but, although there is a top covering, the flow in the channel has a free upper surface. All joints were filled and smoothed and the whole was sprayed with two coats of a waterproof paint to provide as smooth a surface as possible. Wall alignment was continually checked with a theodolite during construction. At the entrance to the channel, a section, widened to 1.8 m, is fitted with screens and filled with 20 mm crushed rock to provide some homogeneity for the initial free stream turbulence. There is also some contraction before the channel is entered and at the start of the parallel section vertical aluminium angles (20 mm leg) have been installed on both walls as trips to encourage fully-developed flow to occur as soon as possible. Nine angles spaced by 100 mm are used. At 25.5 m from the trips, i.e. at 85 half-widths, is the measuring station. At the measuring station a 25 mm thick perspex sheet 3 m long, 1.2 m deep, has been let in, flush with the wall, to allow observation and lighting from the side. A coffer dam allows access to the area behind the perspex sheet. The channel continues on some 5 m past the measuring station. To ensure that all water flow is through the channel, the sides between the channel and the flume have been blocked off. Because of the large mass of water involved (500 tonnes), and the fact that the channel is surrounded by water, the temperature variations in the channel are very small.

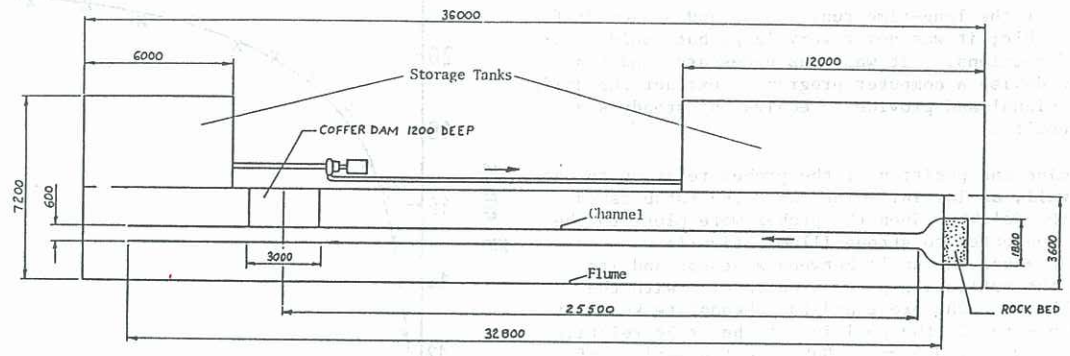

Figure 1

PROBES USED FOR VELOCITY MEASUREMENTS

Three probes were used to obtain instantaneous values of u, u and v, and u and w, where u is the fluctuating velocity in the x (streamwise) direction, v is in the y (normal to the perspex wall) direction and w is in the z (normal to the water surface) direction, (see Figure 2) Hot film sensors (TSI type 20W, 51 μm diameter, 1.0 mm long) were used on all probes i.e. on the single probe (for u) the X-probe (for u and v) and the V-probe (for u and w), and these were arranged as shown in Figure 2.

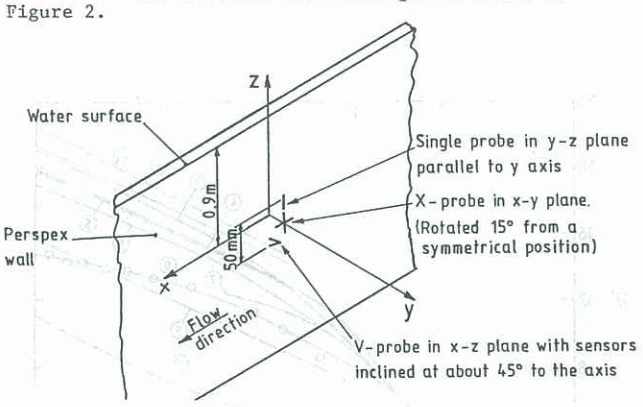

Figure 2

The X-probe was bought as a unit from TSI (type 1241-20W) but the single probe and V-prove were built in-house. On breakage, all probes were repaired by soft soldering on new sensors (TSI 10121-20W is a set of 10 sensors) and coating all parts except the sensor film with an air-hardening water resistant plastic. The sensors, as supplied, are coated with a thin layer (1 to 2 μm) of quartz to protect them from the hazards of the water environment. To prevent any current flow from the sensors to the water, and consequent possible damage to the quartz coating, it was important to ensure that the probe bodies were at the same potential as the water. This was done by having galvanized metal strips, 200 mm wide, 1.2 m long, in the water at the measuring station and arranged along the wall opposite the perspex wall. The metal strips, the probe bodies and all the electronics had a common earth, with care being taken to avoid earth loops.

INSTRUMENTATION

Two TSI Model 1050 constant temperature anemometers and three DISA Model 55M10 anemometers were used. Signals from the anemometers went successively to buck and gain amplifiers, to filters, to a 12-bit A-D unit and finally to file storage using an 11/23 computer. This computer was also used for calibration runs and to control the stepper motors of the probe traversing systems.

CALIBRATION FACILITIES

For calibration purposes the velocity measuring probes are mounted on a travelling carriage that spans across the flume. To limit the transfer of vibration to the probes, the carriage, consisting of an assembly of 300 x 120 mm I beams, is very heavy and has pneumatic tyres that run on steel surfaces. Movement of this carriage by a computer controlled stepper motor provides x direction motion (up to 2.5 m) for the probes. Mounted on the carriage are two traversing systems, the stepper motors of which are also controlled by a computer, to provide movement in the y direction (up to 400 mm) and movement in the z direction (up to 0.9 m) for the probes

To carry out a velocity calibration the probes are raised until they are within about 150 mm of the water surface. A galvanised sheet steel tank 300 mm side, 300 mm deep, 2 m long and closed at one end, is lowered into the channel. The carriage is moved so that the probes enter the water in the tank and a baffle is slid into grooves to prevent any contact between the water in the tank and the water that is flowing around it. By this means the probes are now located in stationary water at the same temperature as the channel water. The carriage is then moved for a range of controlled velocities and the probe outputs are logged into the computer. A curve of the form $E^2 = A + BU^n + CU$ is assumed to fit the data and a computer program determines optimum values of A, B, n and C. After calibration the tank is removed and the probes are returned to the measuring position. In this way the sensors do not have to be exposed to the air and then later returned to the water, a technique we originally tried and which gave considerable problems.

EXPERIMENTAL APPROACH

For hot films in water the manufacturer recommends a maximum operating temperature of 67°C. If the surrounding water is at 25°C then this corresponds to an overheat ratio (between 25° and 67°) of 1.08 for the films we were using. However, we found that, for overheat ratios above about 1.05, small bubbles started to form on the sensor and affect the anemometer output. We finally settled on an overheat ratio of 1.03 for all tests; this corresponds to an operating temperature of about 40°C. Frequency response, checked using the anemometer square wave, was satisfactory.

Preliminary runs showed that, for a flow with a Reynolds number of 15000, the Kolmogorov scale length varied between 0.5 mm and 1 mm while the Kolmogorov frequency varied between 1 Hz and 5 Hz. Thus a filter cut-off frequency of 10 Hz and sampling frequency of 20 Hz were considered suitable for all runs.

The time scales of the flow indicated that for the low Reynolds number flows a total sampling time of 4 hours would be required, while 1 hour would be satisfactory for the higher Reynolds numbers. Convergence of the Spectra for u were used as a guide in establishing these

times. For the long-time runs a slow and steady drift was inevitable; it was never very large but could occur in both directions. It was thus necessary (and possible) to devise a computer program to extract the drift from the signal and provide an equivalent steady-state set of results.

To determine the position of the probes relative to the perspex wall, an initial value was first established using a theodolite. When the probes were close to the wall and subjected to strong illumination it was possible to measure the angle between a sensor and its image in the reflecting perspex surface. With the distance between the probe and the theodolite known it was possible to fix the position of the probe relative to the wall within 0.5 mm. Subsequent positions of the probe could be read off a Sony Magnescale unit, attached to the y traverse, that had a sensitivity of 0.01 mm.

A calibration run for all sensors was always carried out immediately before moving the probe assembly to the required turbulence measurement station. To determine a mean velocity profile only the single probe was used and it was calibrated before and after the profile sweep with a maximum time between calibrations of 2 hours. If the difference between the two calibrations was too large all data was discarded.

RESULTS

A. Mean Velocity Profiles

When $\bar{U}$, the mean velocity in the x direction, was plotted as a function of y, the results obtained close to the wall were typically as shown in Figure 3.

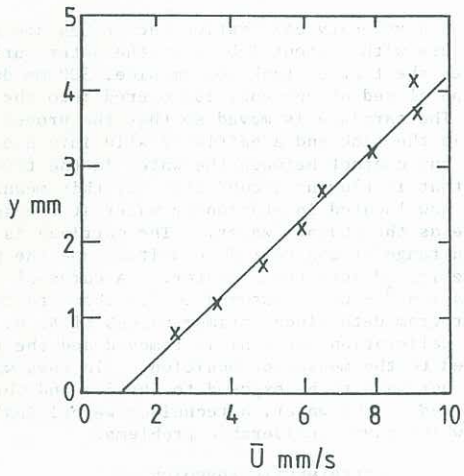

Figure 3
x : Experiments ; - Best fit

A least squares best fit straight line to this data does not pass through the origin. It was assumed that this was due to an incorrect determination of the initial distance of the probe from the wall. Consequently the y data was adjusted (for Figure 3 this amounts to adding 0.5 mm to all y values) to force the best fit line to pass through the origin. The wall shear stress, τ_w, was then determined from the slope of this line using $\tau_w = \mu \partial\bar{U}/\partial y$. From Figure 3, $\partial\bar{U}/\partial y = 2.12\ S^{-1}$ and consequently, with the water at 20°C, $\tau_w = 2.12 \times 10^{-3}\ N/m^2$. A profile of $\bar{U}$ vs y from the wall to the centre-line is shown if Figure 4.

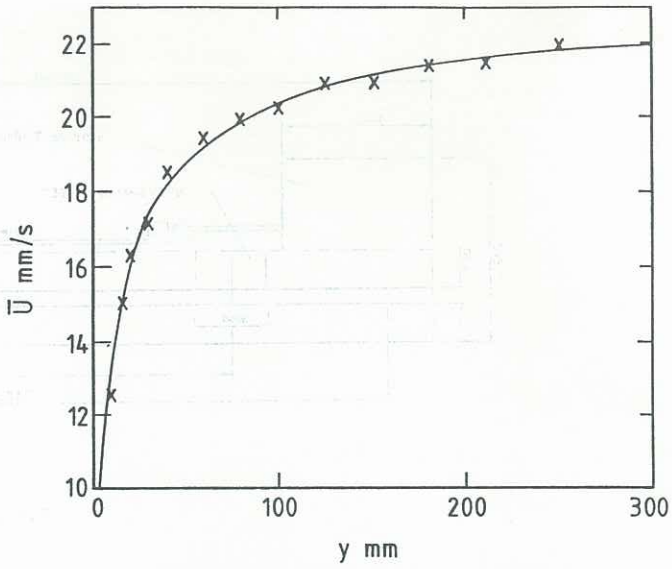

Figure 4
x : Experiments ; - Best fit

From a best fit curve to the experimental data points the mean velocity (obtained by integrating the curve) was $\bar{U}$ = 20.0 mm/s (the centre-line velocity U = 22.0 mm/s). From $\tau_w = C_f \frac{1}{2} \rho \bar{U}$ we get $C_f = 1.06 \times 10^{-2}$. Thus $U_\tau = \bar{U}\,(C_f/2)^{1/2} = 1.46$ mm/s. The subsequent U^+ vs y+ curve is shown in Figure 5.

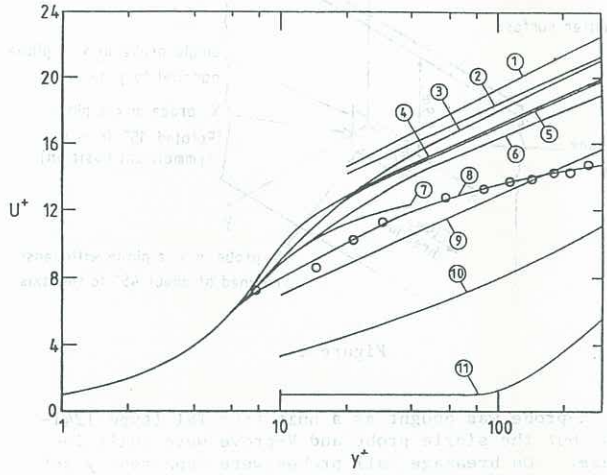

Figure 5
⊙ These experiments (points below y+ = 8 are not shown) 1: Laufer (1953); 2: Comte-Bellot (1965); 3: Eckelmann (1974); 4: Johansson and Alfredsson (1982); 5: Wallace et al (1972); 6: Hanjalic and Launder (1972) 7: Rudd (1972); 8: These experiments; 9: Townes et at (1972), roughness $\varepsilon = D/416$, $R_D = 170{,}000$; 10: Townes et al (1972), roughness $\varepsilon = D/416$, $R_D = 480{,}000$; 11: Townes et al (1982), roughness $\varepsilon = D/53$.

Also shown in Figure 5 are velocity profiles obtained from the literature. Some of these profiles are for channel flow and some for pipe flow. Our results are consistent with other flows in the near wall region but do not lie in the general range of smooth wall results for the outer part of the flow - although they are close to the results obtained by Rudd (1972) who used a laser doppler measuring system. Of interest are the results obtained by Townes et al (1972) for rough surfaces. These indicate that the wall surface may not be as smooth as we thought. There should be no difficulty however in relating the flow structures from the inner and outer regions to one another and in determining any interactions between these structures.

B. Tubulent Fluctuations

Figure 6 shows the results obtained in the near-wall region for the root mean square of the u, v and w fluctuations.

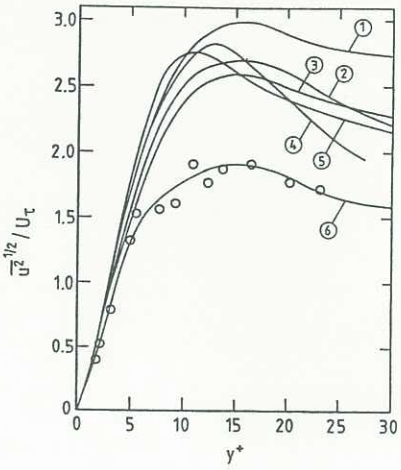

Figure 6(a)
1: Morrison and Kronauer (1969); 2: Ueda and Hinze (1975); 3: Bakewell and Lumley (1967); 4: Eckelmann (1974); 5: Johansson and Alfredsson (1982); 6: These experiments.

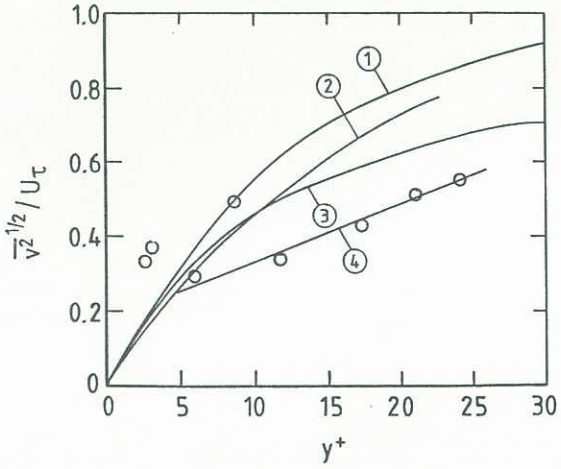

Figure6(b)
1 and 3: Bremhorst and Walker (1973); 2: Eckelmann (1974); 4: These experiments.

The u and v values are lower than values reported in the literature but the w values are close to the Kreplin and Eckelmann (1979) values. The peak in the u and w values at y+ = 15 is consistent for nearly all experiments.

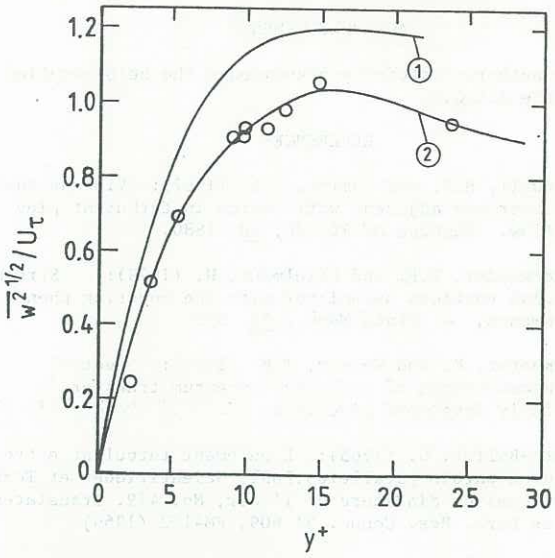

Figure 6(c)
1: Kreplin and Eckelmann (1979); 2: These experiments.

C. Reynolds Stresses

The Reynolds stress $-\overline{uv}$ and $-\overline{uw}$ have been determined and are shown in Figure 7.

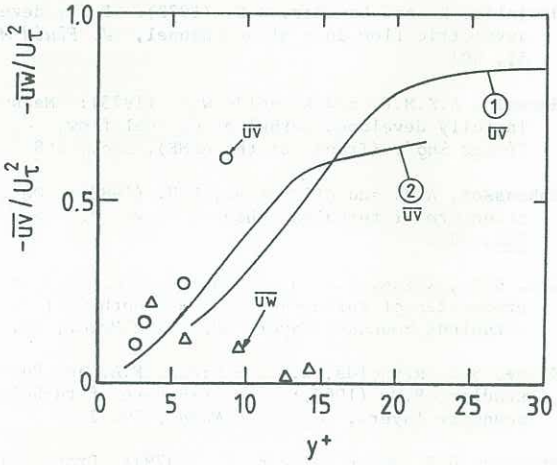

Figure 7
1: Bremhorst and Walker (1973); 2: Eckelmann (1974); o and Δ: These experiments.

Very few results have been reported in the literature for close-wall values of uv and none at all could be found for uw. One would expect that, for two-dimensional flow, away from the wall, uw would be zero. In the close-wall region it appears that $\overline{uw}$ is not negligible although, compared to $\overline{uv}$, the values are not large.

CONCLUSIONS AND COMMENTS

The water channel described has been demonstrated to have a viscous sub-layer of a sufficient thickness to allow reasonably accurate and unique measurements of a turbulent flow in the near wall region. These measurements can be made for a wide range of Reynolds numbers.

The data obtained is currently being used to make a detailed study of coherent structures in the near-wall region.

Preliminary investigations also suggests that, later, useful flow visualisation work can be undertaken.

ACKNOWLEDGEMENTS

The authors gratefully acknowledge the help supplied by the A.R.G.S.

REFERENCES

Bakewell, H.P. and Lumley, J.L. (1967): Viscous sublayer and adjacent wall region in turbulent pipe flow, *Physics of Fluids*, 10, 1880.

Blackwelder, R.F. and Eckelmann, H. (1979): Streamwise vortices associated with the bursting phenomenon, *J. Fluid Mech.*, 94, 577

Bremhorst, K. and Walker, T.B. (1973): Spectral measurements of turbulent momentum transfer in fully developed pipe flow, *J. Fluid Mech.*, 61, 173.

Comte-Bellot, G. (1965): Écoulement turbulent entre deux parois-paralleles.Publ. Scientifiques et Techniques du Ministere de l' air, No. 419. Translated as Aero. Res. Counc. 31 609, FM4102 (1969)

Corino, E.R. and Brodkey, R.S. (1969): A visual investigation of the wall region in turbulent flow, *J. Fluid mech.*, 37, 1.

Eckelmann, H. (1974): The structure of the viscous sublayer and the adjacent wall region in a turbulent channel flow, *J. Fluid Mech.*, 65, 439.

Grass, A.J. (1971): Structural features of turbulent flow over smooth and rough surfaces, *J. Fluid Mech.*, 50, 233.

Hanjalic, K. and Launder, B.E. (1972): Fully developed asymmetric flow in a plane channel, *J. Fluid Mech.*, 51, 301

Hussain, A.K.M.F. and Reynolds W.C. (1975): Measurements in fully developed turbulent channel flow, *J. of Fluids Eng'g* (Trans. of the ASME), Dec., 568.

Johansson, A.V. and Alfredsson, P.H. (1982): On the structure of turbulent channel flow, *J. Fluid Mech.*, 122, 295.

Kim, H.T., Kline, S.J. and Reynolds, W.C. (1971): The production of turbulence near a smooth wall in a turbulent boundary layer, *J. Fluid Mech.*, 50, 133.

Kline, S.J. Reynolds, W.C., Schraub, F.A. and Rundstadler, P.W. (1967): The structure of turbulent boundary layers, *J. Fluid Mech.*, 30, 741.

Kreplin, H.P. and Eckelmann, H. (1979): Propagation of perturbations in the viscous sublayer and adjacent wall region, *J. Fluid Mech.*, 95, 305.

Laufer, J. (1953).
N.A.C.A. Tech., Note, No. 2954.

Ling, S.C. and Ling, T.Y.J. (1974): Anomalous drag-reducing phenomenon at a water/fish-mucus or polymer interface, *J. Fluid Mech.*, 65, 499.

Morrison, W.R.B. and Kronauer, R.E. (1969): Structural similarity for fully developed turbulence in smooth tubes, *J. Fluid Mech.*, 39, 117.

Rudd, M.J. (1972): Velocity measurements made with a laser dopplermeter on the turbulent pipe flow of a dilute polymer solution, *J. Fluid Mech.*, 51, 673

Townes, H.W., Gow, J.L., Powe, R.E. and Weber, N. (1972): Turbulent flow in smooth and rough pipes. *J. of Basic Eng'g* (Trans. of the ASME), 94, 353.

Ueda, H. and Hinze, J.O. (1975): Fine-structure turbulence in the wall region of a turbulent boundary layer, *J. Fluid Mech.*, 67, 125.

Wallace, J.M. Eckelmann, H. and Brodkey, R.S. (1972): The wall region in turbulent shear flow, *J. Fluid Mech.*, 54. 39.

Willmarth, W.W. and Lu, S.S. (1972): Structure of the Reynolds stress near the wall, *J. Fluid Mech.*, 55, 65.