14th Australasian Fluid Mechanics Conference
Adelaide University, Adelaide, Australia
10-14 December 2001

Residual Swirl in Axial-Flow Pump

H. S. Parmigiani, A. Revel and B. P. Huynh

Faculty of Engineering
University of Technology, Sydney, NSW 2007, AUSTRALIA

Abstract

Measurements of residual swirl in an industry-size axial-flow pump unit have been conducted, using a Fechheimer probe. They reveal that even though the unit's components have been constructed according to well established procedures, there is still significant swirl left in the flow. The measurements thus point to ways for improving their design. In addition, the paper describes the experimental facility and methods used. The experimental results would also be useful as test cases for comparison with numerical simulations.

Introduction

This paper reports on the measurements of swirl that is still present in the outlet pipe of an industry-size (410 mm pipe diameter) axial flow pump unit. Such a unit is typically used for irrigation and city water supply from river-bank installations. This work is part of an investigation that has also included obtaining characteristic curves of the pump unit, hydraulic grade lines and developing instruments for the test rig using an industrial standard data logging system [6].

The motivation has been a belief that improvement in the pump unit's performance is still possible by first acquiring more detailed information on the flow and stress (including pressure) fields through the unit's components. Furthermore, such information would help improve fundamental understanding of the fluid mechanics involved. Specifically, since any swirl that is left in the flow after exit from the diffuser is normally considered as unrecoverable angular kinetic energy, the information gained would form a basis for improvement in the design of important components like stator and diffuser. Thus preliminary testing of alternative designs of these components has also been carried out.

The experimental results should also prove useful as test cases for comparison with numerical simulations for code validation. Furthermore, the experimental facility and methods described could be helpful for conducting similar investigations.

Experimental Facility and Methods

The experiments have been conducted on a horizontal, closed-circuit, axial flow pump test rig shown diagrammatically in figure 1. The rig is located in the Hydraulics Laboratory of the University of Technology, Sydney. The axial flow pump, which is single-stage, is of an industry-size (410 mm pipe diameter) designed by Ornel Pumps, based on the work of O'Brien and Folsom [5] (these designs are now manufactured by Orbit Pumps in South Africa). The design has also been checked against methods presented in Logan [4], to a satisfactory agreement [6]. Thus the unit can be considered as having been constructed according to well established procedures.

Figure 2 shows profile of the pump unit with its key components. Water is conducted from the inlet pipe with no pre-swirl to the impeller via the inlet bowl (note the straightener with PVC tubes in figure 1); see figure 3. Upon leaving the impeller, the flow enters the 8-vane stator which is supposed to restore the flow to axial direction. A conical diffuser follows the stator, and discharges the flow into the outlet pipe. Key dimensions (in mm) of these components are as follows. Inlet bowl: length 340; impeller: tip diameter 304, hub diameter 170, length 102; stator: 8 vanes, tip diameter 304, hub diameter 170, length 160; diffuser: inlet diameter 304, exit diameter 410, length 635. Figure 4 shows the stator and inlet to the diffuser.

A 5-blade impeller and a 6-blade one, shown in figure 5, are used in this work. Flow rate is regulated using a throttle valve, and a feed pump is used to adjust the pressure at inlet to the pump; see figure 1. In all experiments, inlet pressure is maintained in the 40 - 43 kPa range, and the pump unit operates in the non-cavitating regime. Rotational speed is constant at 1490 rpm. Typically, with the 5-blade impeller the unit delivers 300 l/s at 10.5 m of total head at a peak efficiency of 76 %. The corresponding non-dimensional specific speed is about 3.2.

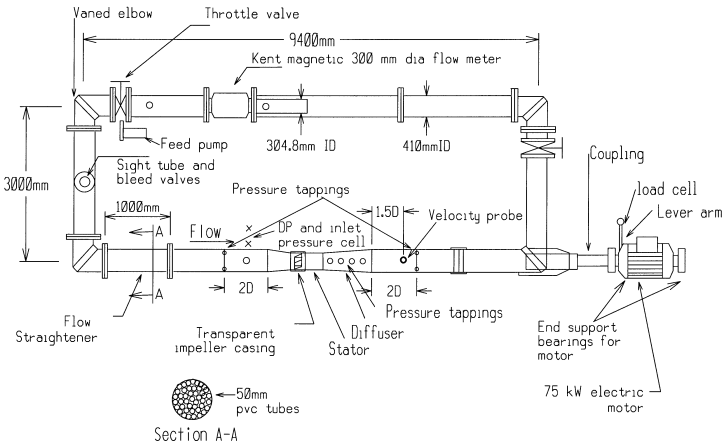

Figure 1. Plan of the horizontal, close-circuit axial flow pump test rig. Fechheimer velocity probe is located at 1.5 × pipe diameter after exit from the diffuser.

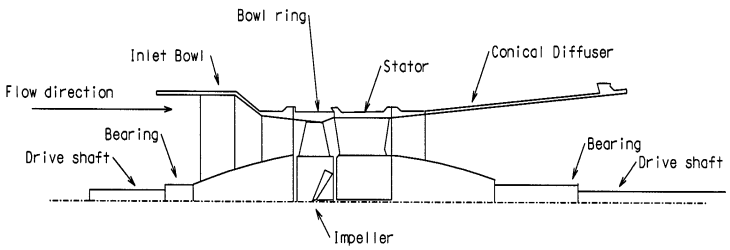

Figure 2. Profile of the pump unit.

To measure the flow velocity in both magnitude and direction, a Fechheimer probe has been constructed [1,2]. This probe is similar to a Pitot-Static probe in principles of operation, but

having 3 holes on a cylindrical body: a middle hole for stagnation pressure, and two equi-distant side-holes for static pressure. U-tube manometers are used for measuring pressure differences among the holes.

A Fechheimer probe has been chosen for its strength for a reasonably small size, and because of the well-known difficulty of alignment with Pitot-Static probe in swirling flow. It has been ensured that the effects relating to bending due to drag and vibration due to vortex shedding are negligible. Figure 6 shows the Fechheimer probe head design. The probe's readings have been checked against those of a Pitot-Static probe in a wind tunnel, and a magnetic flow meter in an 80 mm diameter water pipe. The agreement has been very good, as shown in figure 7. Figure 8 shows the Fechheimer probe in place on top of the outlet pipe from the pump unit.

In a typical operation with the probe, it is rotated slowly until the pressure difference between the two side-holes is zero. The middle hole would then be pointing in the direction of the flow. With flow direction established, the difference in readings between the middle hole and side-holes can be used to compute the velocity magnitude.

Figure 3. Front view of pump unit, looking into the inlet bowl. Note some blades of the stainless steel impeller are visible at the back.

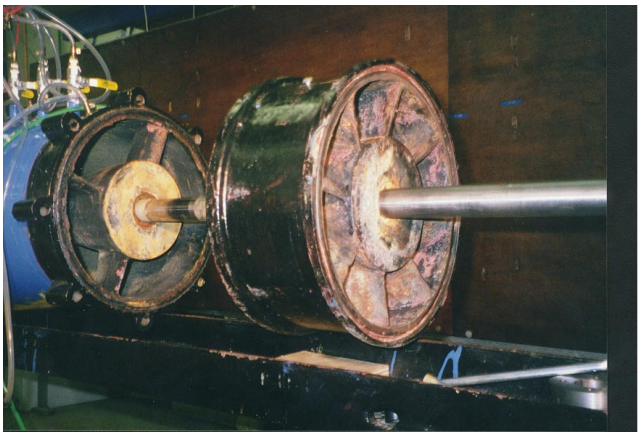

Figure 4. Stator (on the right) and view of inlet to the diffuser.

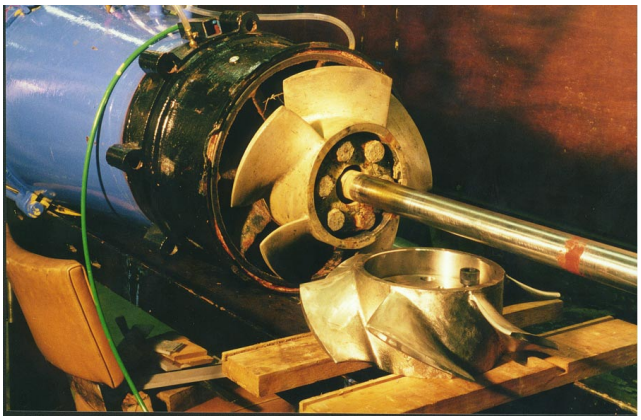

Figure 5. The impellers: the 5-blade impeller is in place in front of the 8-vane stator; the 6-blade impeller is resting on a wooden support.

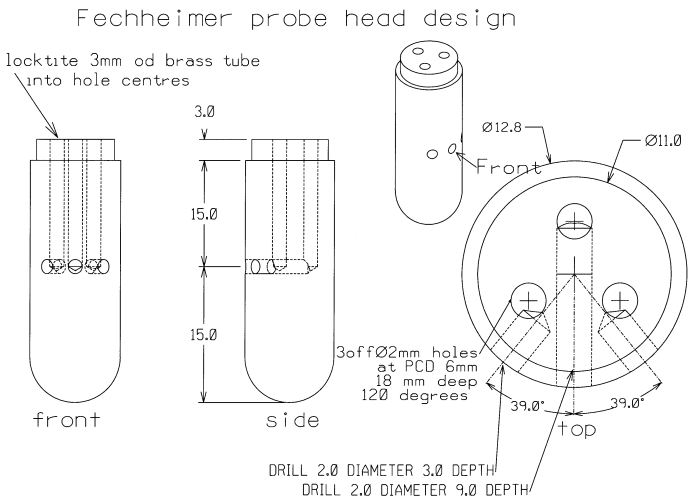

Figure 6. Fechheimer velocity probe head design.

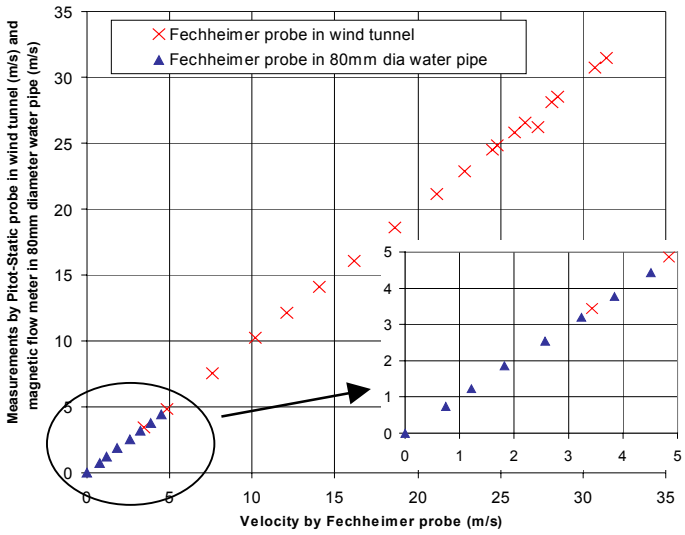

Figure 7. Comparison between velocity measurements by Fechheimer probe on the one hand, and on the other by a Pitot-Static probe in wind tunnel, and a magnetic flow meter in a water pipe.

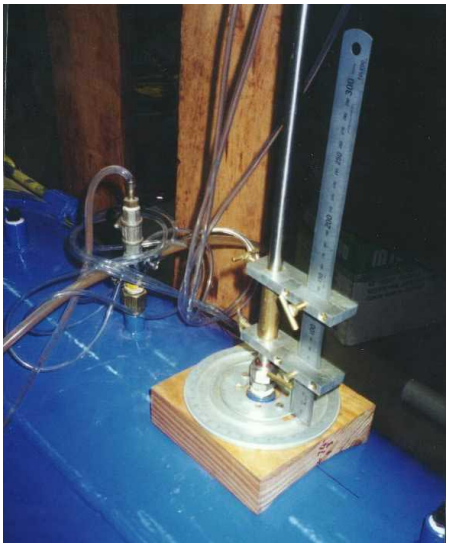

Figure 8. Fechheimer probe in place on top of pump unit's outlet pipe.

Results and Discussions

Five sets of measurements have been obtained: 2 with the 5-blade impeller and 3 with the 6-blade one. In each set, as the flow rate is gradually reduced from a maximum value, velocity's direction and magnitude are recorded at 3 fixed radial locations. Here velocity's direction is determined by its swirl angle which is defined as the angle between the velocity vector and axial direction.

Figure 9 shows all measurements with the 5-blade impeller, consolidated from the 2 sets of data, while all 3 sets of measurements using the 6-blade impeller are presented in figure 10. Note that in these figures, which show swirl angle plotted against velocity's magnitude, the best efficiency points (BEP) are indicated with an " X ".

From these figures, it can be seen that there is still significant swirl in the flow after exit from the pump unit; at BEP, a large proportion of the flow, which is associated with the largest radial distance (or closest to the pipe wall as shown in figures 9 and 10), has a swirl angle of about 18°. And at minimum velocity values, which correspond approximately to lowest flow rates, swirl angle is about twice as large.

The flow also deviates more from the axial direction at larger radii. At the exit of the impeller, this would be a normal situation; however, after the flow has gone through the stator and diffuser, this state of affairs indicates primarily that the stator vanes have not been uniformly efficient at removing the flow's swirl component and converting it into the more useful pressure energy. This also suggests that a substantial portion of the fluid has not been sufficiently affected by the vanes' straightening effects.

It is thus evident that there is still room for improvement in the design of the stator-diffuser assembly (diffuser is here considered together with the stator because of the generally beneficial effect of inlet swirl in diffuser performance [3]). One possibility is to change the stator's exit vane angle in the direction opposite to impeller rotation, particularly at large radius.

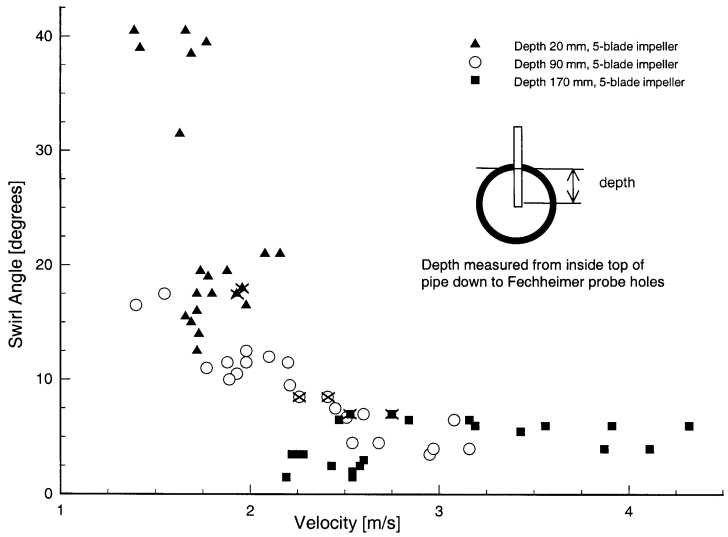

Figure 9. Consolidated two sets of measurements of swirl angle versus velocity magnitude at 3 fixed radial locations, using the 5-blade impeller. Best efficiency points (BEP) are marked with an " X ".

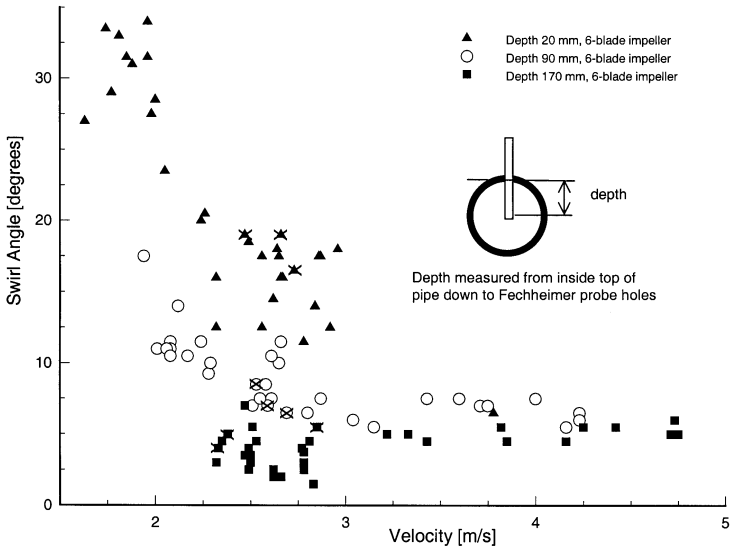

Figure 10. Similar to figure 9, but here 6-blade impeller and 3 sets of measurements have been used.

Also, swirl angle is much more sensitive to changes in the flow rate at larger radii, generally increasing with a reduction in the flow rate. Close to the pump's centre-line, swirl angle stays virtually constant for most of the flow rates, and decreases slightly at very low flow rates, a trend opposite to that at larger radii.

That swirl angle generally increases with decreasing flow rate agrees with expectation, however. For, a lower flow rate means a smaller axial velocity component. And because the rotational speed is constant, the ratio of swirl over axial components increases, which is an increase in swirl angle.

Comparison between measurements using the 5-blade and 6-blade impellers shows that while the general features mentioned above are similar, there are still some interesting differences.

First, data from the 6-blade impeller are shifted to the higher velocity values in comparison with those from 5-blade impeller, particularly at larger radii. Thus, for example, at 20 mm depth from the pipe wall, BEP occurs at about 2.6 m/s for 6-blade impeller, compared with about 1.9 m/s for 5-blade impeller. From the trends of the data, this shift is also an upward shift. This means that at a given velocity value, the 6-blade impeller imparts more swirl on the fluid than the 5-blade impeller.

This, however, is in agreement with the fact that more fluid would be in close contact with the blades of the 6-blade impeller simply due to a higher number of them, and as a result the flow would possess more swirl. The shift to higher velocity also means that at BEP, flow rate is higher with the 6-blade impeller while swirl angle is about the same. That is, more swirl kinetic energy is still present in the flow with the 6-blade impeller than with the 5-blade one. A larger swirl proportion, which by this stage has become unrecoverable energy, also means lower efficiency. This indeed is the case; peak efficiency for the 6-blade impeller is in the range of 74 - 76 % while with 5-blade one, it is in the range 76 - 78 %.

Also, the change in swirl angle with respect to velocity change is more gradual with the 6-blade impeller, particularly at larger radii. Again, this can be attributed to similar mechanism as above. For, in an increase of flow rate which results in higher axial velocity, more fluid would possess swirl with the 6-blade impeller, resulting in a relatively milder drop in swirl angle.

Conclusions

Measurements of the residual swirl at exit of an axial flow pump unit have been presented and it is seen that significant amount of it is still present. Variations of swirl with radial distance and flow rate have also been considered. The results would help point to possible ways to improve the design of the unit's components, particularly the stator and diffuser.

The data would be useful for comparison with numerical simulations for code validation; more detailed geometry is available from the authors. Comparison between measurements using 5-blade and 6-blade impellers has also been carried out, and qualitative explanation for some observed differences offered.

Description of experimental facility and methods has also been given.

Acknowledgment

We would like to thank Mr Hugh Nelson, the engineer who designed the pump unit the present work is based on, for the help and inspiration given to us.

References

[1] Binder, R.C., *Fluid Mechanics, 5th Ed.*, Prentice-Hall, 1973.

[2] Gerhart, P.M., Gross, R.J. & Hochstein, J.I., *Fundamentals of Fluid Mechanics, 2nd Ed.*, Addison-Wesley, 1992.

[3] Japikse, D. & Baines, N.C., *Diffuser Design Technology*, Concepts ETI, 1998.

[4] Logan, E., Jr., *Turbomachinery: Basic Theory and Applications, 2nd Ed., Revised and Expanded*, Marcel Dekker, 1993.

[5] O'Brien, M.P. & Folsom, R.G., The Design of Propeller Pumps and Fans, *Univ. Calif. Publ. Eng.*, **4**(1), 1939.

[6] Parmigiani, H.S., *Axial Flow Pump Unit*, B.E. Capstone project report, University of Technology, Sydney, 2000.