Fiber-Wireless Networks and Subsystem Technologies

Christina Lim, *Senior Member, IEEE*, Ampalavanapillai Nirmalathas, *Senior Member, IEEE*, Masuduzzaman Bakaul, Prasanna Gamage, Ka-Lun Lee, *Member, IEEE*, Yizhuo Yang, Dalma Novak, *Fellow, IEEE*, and Rod Waterhouse, *Senior Member, IEEE*

***Abstract*—Hybrid fiber-wireless networks incorporating WDM technology for fixed wireless access operating in the sub-millimeter-wave and millimeter-wave (mm-wave) frequency regions are being actively pursued to provide untethered connectivity for ultrahigh bandwidth communications. The architecture of such radio networks requires a large number of antenna base-stations with high throughput to be deployed to maximize the geographical coverage with the main switching and routing functionalities located in a centralized location. The transportation of mm-wave wireless signals within the hybrid network is subject to several impairments including low opto-electronic conversion efficiency, fiber chromatic dispersion and also degradation due to nonlinearities along the link. One of the major technical challenges in implementing such networks lies in the mitigation of these various optical impairments that the wireless signals experience within the hybrid network. In this paper, we present an overview of different techniques to optically transport mm-wave wireless signals and to overcome impairments associated with the transport of the wireless signals. We also review the different designs of subsystems for integrating fiber-wireless technology onto existing optical infrastructure.**

***Index Terms*—Fiber-wireless, microwave photonics, optical-wireless integration, radio-over-fiber.**

I. Introduction

THE explosive growth of global mobile and wireless access technology in recent years has been fuelled by the maturing and more reliable digital and RF circuit fabrication and miniaturization technologies for producing smaller portable wireless devices [1]. It is envisaged that the growth of the mobile and wireless community will continue at an even greater pace in the next decade. Currently available wireless services and standards such as Wi-Fi, GSM, UMTS are concentrated in the lower microwave band. New emerging wireless standards such as WiMAX and LTE will further enhance existing wireless transmission speeds and throughputs; however, they still operate within the lower microwave regions (2–4 GHz). This places a heavy burden on the already congested wireless spectrum in the microwave region. This is also the fundamental driver that has led to new wireless technologies which can exploit the large unused bandwidths of sub-millimeter or millimeter-wave (mm-wave) frequency regions for the provision of future broadband wireless services. One particular band of interest is the unlicensed 60 GHz frequency band (57–64 GHz) which is targeted towards short range in-building high-speed applications, has gained significant popularity in the last few years [2]. With the inherent high propagation loss characteristics of wireless signals at these frequencies, pico- or microcellular architectures are essential to provide efficient geographical coverage which necessitates a large deployment of antenna base-stations (BSs). With the dramatic increase of the throughput of each BS in such systems, the use of an optical fiber backbone is required to provide broadband interconnections between the central office (CO) and all the antenna BSs. This leads to the integration of the optical and wireless broadband infrastructures via a common backhaul network that in turn offers significant advantages while supporting both wired and wireless connectivity. In this hybrid network layout, significant reduction of the antenna BS complexity can be achieved by moving the routing, switching and processing functionalities to the CO. This strategy also enables the cost and equipment to be shared among all the antenna BSs.

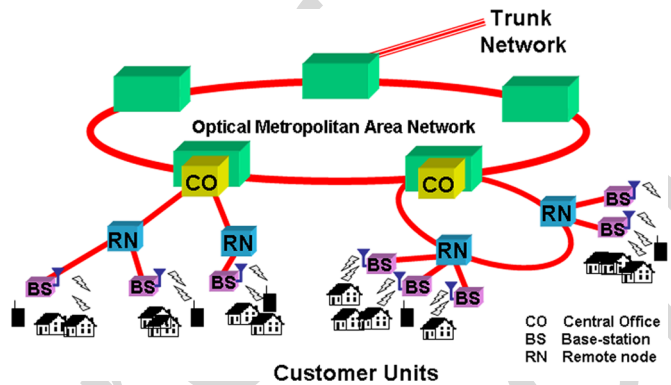

Fig. 1. Millimeter-wave fiber-wireless network.

Although the optical-wireless integration is able to simplify the backhaul infrastructure and offers significant benefits to future service providers, the implementation of the hybrid fiber-wireless network is not straightforward and issues regarding wireless signal transport, signal impairments, spectrum allocation, performance optimization and integration with existing infrastructure have to be considered. This paper will provide an

Manuscript received May 07, 2009; revised August 19, 2009. This work was supported in part by the Australian Research Council Discovery Project Grant DP0452223.

C. Lim, A. (Thas) Nirmalathas, P. Gamage, K.-L. Lee, and Y. Yang are with the ARC Special Research Centre on Ultra Broadband Information Networks (CUBIN), Department of Electrical and Electronic Engineering, The University of Melbourne, VIC 3010, Australia (e-mail: c.lim@ee.unimelb.edu.au).

M. Bakaul is with the National ICT Australia, Victoria Research Laboratory, Department of Electrical and Electronic Engineering, The University of Melbourne, VIC 3010, Australia (e-mail: m.bakaul@ee.unimelb.edu.au).

D. Novak and R. Waterhouse are with Pharad, LLC, Glen Burnie, MD 21061 USA (e-mail: dnovak@pharad.com; rwaterhouse@pharad.com).

Digital Object Identifier 10.1109/JLT.2009.2031423

0733-8724/$26.00 © 2009 IEEE

IEEE Proof Web Version

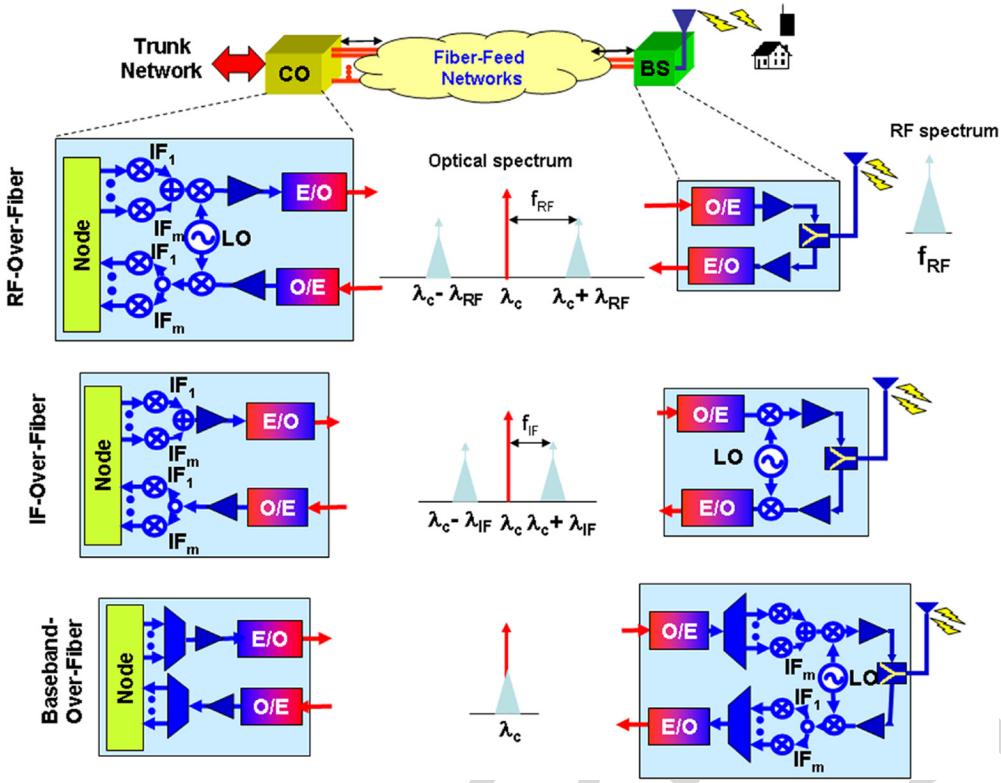

Fig. 2. Wireless signal transport schemes: (a) RF-over-fiber, (b) IF-over-fiber, (c) Baseband-over-fiber.

overview of the progress made in the last two decades in fiber-wireless technology focusing on the various schemes and strategies to tackle the key challenges.

This paper is organized as follows: Section II describes the various optical transport schemes for wireless signals and Section III investigates the impairments the wireless signals experience while propagating over the optical link and the corresponding strategies to overcome these impairments. Section IV focuses on the subsystem and interface designs for WDM-based mm-wave fiber-wireless networks while Section V provides an overview of fiber-wireless application in a heterogeneous access network. Finally, conclusions are presented in Section VI.

II. Optical Transport Schemes for Wireless Signals

Millimeter-wave (mm-wave) fiber-wireless systems have the advantage of being able to exploit the large unused bandwidth in the wireless spectrum as well as the inherent large bandwidth of the optical fiber. Such a hybrid architecture can potentially provide high data rates and throughput with minimal time delay. The generic architecture of a mm-wave fiber-wireless architecture is shown in Fig. 1. The conceptual infrastructure comprises a CO which is connected to a large number of antenna BSs via an optical fiber network. Much research has been carried out on the development and exploitation of optically-fed mm-wave wireless technologies with earlier work focusing on fiber link configurations for wireless signal distributions [3]–[6]. In general, there are three possible methods to transport the mm-wave wireless signals over the optical link as shown graphically in Fig. 2: RF-over-fiber, IF-over-fiber, and Baseband-over-fiber. The choice of the optical transport scheme will also determine the hardware requirements in the CO and antenna BS.

A. RF-Over-Fiber

The simplest scheme for transporting mm-wave wireless signals via an optical fiber feed network is to directly transport the mm-wave wireless signals over fiber (RF-over-fiber) without any need for frequency translation at the remote BS as shown in Fig. 2. In this configuration, the mm-wave wireless signal is externally modulated onto the optical carrier resulting in an optical double sideband (ODSB) signal as illustrated in Fig. 2. The two sidebands are located at the wireless carrier frequency away from the optical carrier. Upon detection at the BS, the mm-wave wireless signal can be recovered via direct detection using a high-speed photodetector. RF-over-fiber transport has the advantage of realizing simple base-station designs with additional benefits of centralized control, independence of the air-interface and also enabling multiwireless band operation. However one of its major drawbacks is the requirement for high-speed optical modulation techniques that have the ability to generate mm-wave modulated optical signals and also high-speed photodetection schemes that directly convert the modulated optical signals back to mm-wave signals in the RF domain. Another key issue is the significant effect of fiber chromatic dispersion on the detected mm-wave wireless signals [7]–[9].

B. IF-Over-Fiber

In contrast to the transmission of mm-wave wireless signals over fiber, the wireless signals can be downconverted to a lower

IEEE Proof Version

intermediate frequency (IF) at the CO before optical transmission. The effects of fiber chromatic dispersion on the optical distribution of IF signals are reduced significantly. In addition, IF-over-fiber transport scheme has the advantage of using low-speed optoelectronic devices. The complexity of the antenna BS hardware however, increases with IF signal transport for mm-wave wireless access systems. It will now require a stable mm-wave local oscillator (LO) and high-speed mixers for the frequency translation processes in the BS as illustrated in Fig. 2. This may also present a limitation when considering the ability to upgrade or reconfigure the wireless network for the inclusion of additional mm-wave wireless channels or alterations to the wireless frequency. The subsequent requirement for a mm-wave LO at the antenna BS can be overcome by remotely delivering the LO signal optically from the CO [10]. This also enables centralized control of the LO signals themselves.

C. Baseband-Over-Fiber

As shown in Fig. 2, the third transport scheme transports the wireless signal as a baseband signal over fiber, and then upconverts the information to the required mm-wave radio frequency at the antenna BS. This scheme has the advantage of using mature digital and electronic circuitry for signal processing at the BS. In addition, it also enables low-speed optoelectronic devices to be used within the BS. As with IF-over-fiber, the effects of fiber chromatic dispersion are also greatly reduced. Furthermore remote delivery of a mm-wave LO signal from the CO can overcome the need of a physical LO in the BS. This transport scheme is dependent on the air-interface which means that the BS must have the intelligence to thoroughly process the wireless signals before sending the baseband information back to the CO. Hence, it necessitates the housing of additional hardware within the BS to perform these tasks which increases the complexity of the BS drastically. With the recent advancements in CMOS technology, high-frequency radio-on-chip has been demonstrated [11], [12]. Also, the emergence of silicon photonic technology may enable the future low-cost integration of optoelectronic and electronic devices in order to achieve a cost-effective, compact transceiver module within the antenna BS [13].

D. Discussion

Comparing the three transport schemes, ultimately there is a trade-off between the complexity in the RF electronic and the optoelectronic interfaces within the base-station. One of the key challenges in implementing mm-wave fiber-wireless access systems is to efficiently distribute the wireless signals while maintaining a functionally simple and compact BS design. Amongst the schemes, RF-over-fiber transport scheme has the potential to simplify the BS design for mm-wave fiber-wireless systems. Having said this, the signals are susceptible to a number of impairments along the link that may degrade the overall system performance. This will be discussed in the next section.

III. Optical Impairments and Strategies to Overcome Impairments in mm-Wave Fiber-Wireless Links

Fig. 3 illustrates the various impairments that the optically modulated mm-wave signal experiences as it propagates along the optical fiber. Within a simple point-to-point link connecting an antenna BS and a CO, the received mm-wave wireless signals must undergo electrical-to-optical (E/O) conversion typically via external modulation using an electro-optic modulator in conjunction with an optical carrier. Due to the nonlinear characteristics of the modulator, the mm-wave wireless signals are typically weakly modulated onto the optical carrier, resulting in a very low modulation efficiency. In addition the external modulator nonlinear characteristics generate intermodulation products which contribute to the overall signal degradation. Once the mm-wave radio signals are modulated onto the optical carrier, the optical signal will be transported over the optical fiber link to the central office. The optical distribution of the mm-wave radio signals is subjected to the effects of fiber chromatic dispersion that will severely limit the overall transmission distance [8], [9]. In addition, the optical spectral usage for the distribution of the mm-wave radio signal is highly inefficient, considering that the amount of useful information that is being transported (<3 Gb/s) is only a fraction of the occupied spectrum (>40 GHz). In a long-reach scenario, the optical signal may experience signal degradation due to fiber nonlinearities if the optical signal power is optically amplified to overcome link losses and the amplified optical power is large enough to trigger fiber nonlinearity effects. Another impairment that the signals may experience in a long-reach environment is phase decorrelation between the optical carrier and the wireless signals which may introduce an addition penalty [14]. Upon reception at the receiver, the optical signal undergoes an optical-to-electrical (O/E) conversion in a photodiode. The photodiode is also a non-linear device and is governed by the square-law process. The detection process will further introduce distortions into the system. Therefore, it is of great importance that these various impairments that the signals experience along the link be mitigated to improve the signal quality and the overall performance of the mm-wave hybrid fiber-wireless link. In this section, we review the different mitigation strategies and techniques to overcome some of the impairments.

A. Impact of Fiber Chromatic Dispersion on Optically Modulated Millimeter-Wave Signals

When the mm-wave wireless signals are intensity modulated onto an optical carrier, it will result in a double-sideband-with-carrier (ODSB) modulation format where the sidebands are located at the mm-wave frequency on either side of the optical carrier. Hence, when the mm-wave modulated optical signal propagates along a dispersive fiber, the two sidebands will experience different amount of phase shift relative to the optical carrier. Upon detection at the photodetector, the square-law process generates two beat components at the desired mm-wave frequency. The received RF power of the mm-wave signal varies depending on the relative phase difference between the two beat components. The RF power variation is dependent on the fiber dispersion parameter, the transmission distance and also the mm-wave frequency as governed by the following equation [8]:

$$P_{\mathrm{RF}} \propto \cos^2\left(\pi c L D \left(\frac{f_{\mathrm{mm}}}{f_0}\right)^2\right) \tag{1}$$

IEEE Proof Web Version

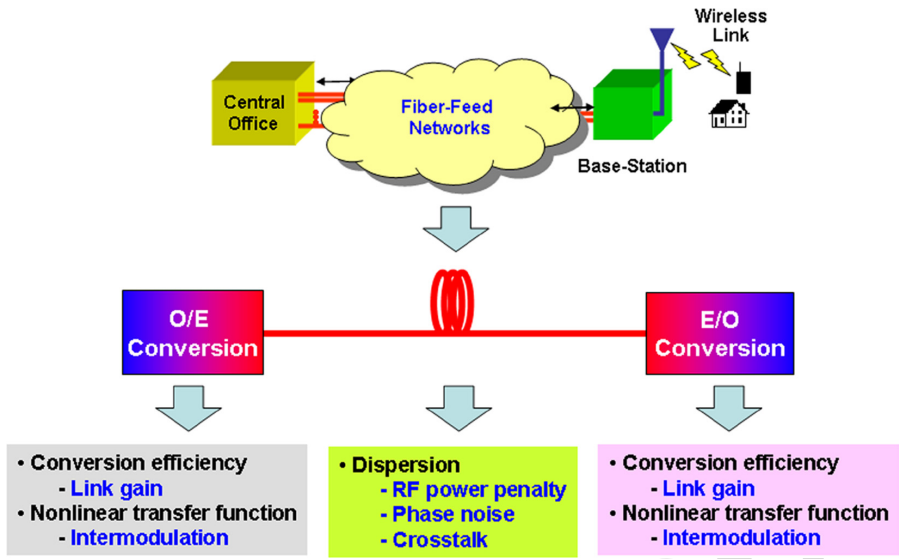

Fig. 3. Optical impairments in mm-wave fiber-wireless links.

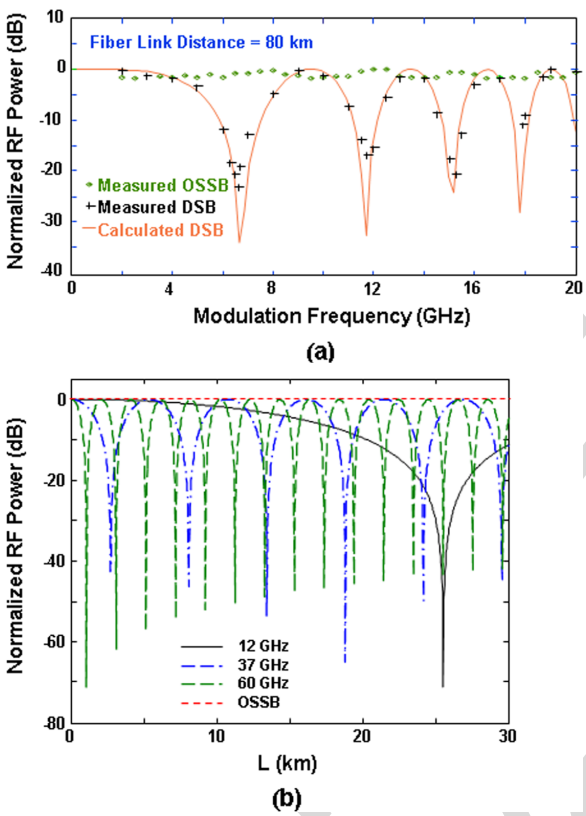

Fig. 4. (a) Measured and calculated normalized received RF power for ODSB and OTSSB+C modulation as a function of modulation frequency for L = 80 km (b) as a function of fiber transmission length for modulation frequencies at 12 GHz, 37 GHz and 60 GHz.

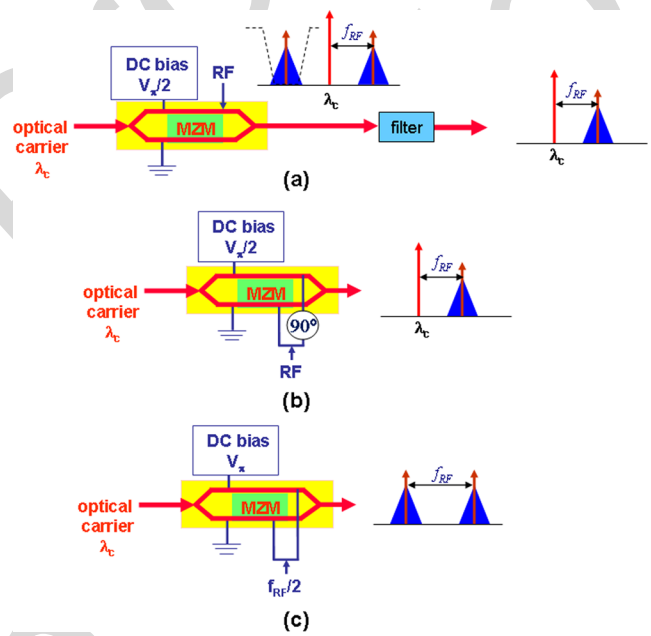

Fig. 5. (a) OSSB+C signal generation using narrowband filter, (b) OSSB+C signal generation using DEMZM, (c) Optical carrier suppression signal generation.

where D represents the fiber dispersion parameter in ps/nm/km, c is the velocity of light in a vacuum, L is the fiber transmission length, f_{mm} represents the mm-wave modulating frequency and f_0 is the optical carrier center frequency. To quantify the severity of the penalty, shown in Fig. 4(a) is the measured and calculated normalized received RF power using (1) as a function of modulating frequency for transmission over 80 km of single-mode fiber. Normalized RF power is defined as the ratio of detected RF power at 80 km of fiber to the RF power calculated at 0 km of fiber. From the results it can be seen that the RF power varies in a periodic manner with complete power suppression occurring at specific modulating frequencies [8]. Fig. 4(b) shows the received normalized RF power plotted as a function of fiber transmission distance (L) for ODSB signals with modulating frequencies of 12 GHz, 37 GHz and 60 GHz, respectively. It can be seen that the impact of fiber chromatic dispersion becomes more pronounce with increasing modulating frequency.

Since the fiber-induced dispersion penalties are so severe in direct-detection optically-fed mm-wave systems, various techniques have been proposed and demonstrated to overcome

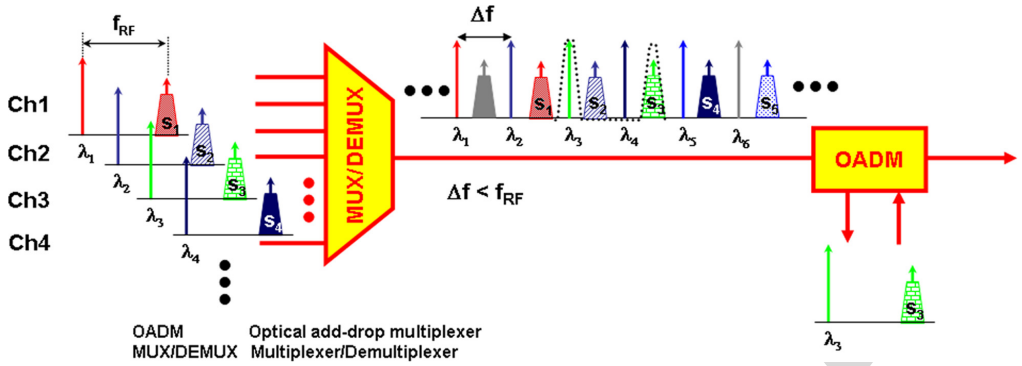

Fig. 6. Schematic showing wavelength interleaving scheme for OSSB + C signals.

dispersion effects in such systems. Amongst these techniques are the optical-single-sideband-with-carrier (OSSB + C) modulation scheme [15], optical carrier suppression technique [16]–[18], external filtering [19]–[22], using chirped fiber gratings [23], using fiber nonlinearities [24]–[26], and using phase conjugation [27]. A convenient technique to overcome the fiber dispersion effect is by simply removing one of the optical sidebands in an optical DSB modulated signal. This can be done via optical filtering using a narrowband notch fiber Bragg grating where the reflective band coincides with the unwanted sideband [19] as illustrated in Fig. 5(a). While this technique is simple to implement, the limited flexibility makes the implementation difficult to accommodate for modifying the mm-wave frequency.

Another technique to overcome the impact of fiber chromatic dispersion on mm-wave modulated optical signals is by using the OSSB + C modulation format. The OSSB + C formatted signal can be generated via cancellation of the unwanted optical sideband within an external optical modulator. This can be done using a dual-electrode Mach–Zehnder modulator (DEMZM) biased at quadrature and with the RF signal applied to both electrodes with a 90° phase shift between the two electrodes [15] as illustrated in Fig. 5(b). The interaction between the RF modulation and the optical signals results in the suppression of one of the odd-harmonics modulation sidebands. Both the optical filtering and OSSB + C techniques suffer a 6 dB electrical loss since half of the optical sideband power is removed in comparison to the optical double sideband case. Also shown in Figs. 4(a) and (b) are the measured and calculated normalized received RF power for OSSB + C which clearly indicates that it is able to overcome the dispersion-induced RF power penalty.

The optical carrier suppression scheme is another effective method to combat dispersion effects in mm-wave fiber-wireless links [16]–[18]. By biasing a single-electrode Mach–Zehnder modulator (MZM) at the minimum transmission point of the transfer function, the optical carrier will be suppressed to generate a double-sideband-suppressed-carrier optical signal as shown in Fig. 5(c). Such an implementation requires only half the desired modulating frequency to drive the MZM. The mixing of the two optical carriers at a high-speed photodetector generates a single beat component at twice the drive frequency which is not affected by dispersion-induced RF power penalties. Despite this simple, elegant approach, this technique requires a large RF drive power to obtain a desirable modulation depth since the modulator is biased in the nonlinear region.

B. Optical Spectral Efficiency for Transporting Optically Modulated Millimeter-Wave Signals

It is important to note that despite the large wireless carrier frequency, the wireless information bandwidth is typically only occupying a small fraction of the bandwidth relative to the carrier frequency. Hence, to transport a mm-wave wireless signal in an ODSB signal format where the wireless sidebands are located on either side of the optical carrier inherently leads to inefficient use of optical bandwidth. On the other hand, the OSSB + C modulation scheme not only overcomes the fiber chromatic dispersion issue, it also improves the optical spectral usage by at least 50% compared to the ODSB case. Nevertheless the transportation of OSSB+C modulated radio signals at mm-wave frequencies still leads to the inefficient use of the optical spectrum especially in a wavelength-division-multiplexed (WDM) environment where the actual information bandwidth of the radio signals modulated onto an optical WDM channel (typically at 50 or 100 GHz spacing) is <2 GHz. This also applies to the optical carrier suppression method. Therefore, the optical transport of mm-wave modulated optical signals leads to the inefficient use of the optical bandwidth. Recently there have been a number of proposed schemes to improve the optical spectral usage for the transportation of optically modulated mm-wave signals [28], [29]. These techniques are based on interleaving multiple mm-wave optical signals, making use of the unused spectral band between the optical carrier and sideband in an OSSB + C signal and that between the two sidebands in the optical carrier suppression technique as illustrated in Fig. 6. In principle, wavelength interleaving is able to enhance the overall capacity within the standard 1550 nm Erbium-doped fiber amplifier (EDFA) gain window by a factor of 3 for a 37.5 GHz fiber-wireless link incorporating OSSB + C [30].

Table I summarizes the unique advantages and disadvantages of different optical modulation schemes for transporting mm-wave wireless signals.

C. Optical Modulation Depth for Optically Modulated Millimeter-Wave Signals

Another issue related to mm-wave fiber-wireless signals is the weak modulation of the wireless signals. The mm-wave wire-

IEEE Proof Web Version

TABLE I
ADVANTAGES AND DISADVANTAGES OF DIFFERENT MODULATION SCHEMES

Optical mm-wave modulation schemes	Advantages	Disadvantages
Intensity modulation (Optical double sideband)	• Simple to generate	• Performance limited by dispersion-induced RF power penalty • Spectrally not efficient
Optical single sideband with carrier (OSSB+C) format	• Overcome dispersion-induced RF power fading • Minimal bit-walkoff impact • Improves spectral efficiency by 50% compared to ODSB	• Low receiver sensitivity • Performance may be limited by phase decorrelation in a long-reach environment
Optical carrier suppression technique	• Overcomes dispersion-induced RF power fading • Uses half the required LO frequency • Improves spectral efficiency by 50% compared to ODSB	• Suffers from bit-walkoff for longer transmission distance • Requires large RF drive power

less signal is typically weakly modulated onto the optical carrier due to the narrow linear region of intensity modulators. Consequently the power of the optically modulated mm-wave sideband can be more than 20 dB below that of the optical carrier for an $\mathrm{OSSB+C}$ signal. To improve the link performance, the optical power of the signals can be increased by using a high power optical source or an optical amplifier; however, this may lead to increased intermodulation distortions at the receiver or even damage of the receiver due to a too large optical power incident on the optical detector [31]. A few techniques have been proposed to improve the modulation efficiency of these signals including Brillouin scattering [31], [32], external optical filtering [33], [34], and optical attenuation [35].

In principle, an optical carrier suppression signal has better receiver sensitivity compared to an $\mathrm{OSSB+C}$ signal. Shown in Fig. 7 is a technique to improve the modulation efficiency of $\mathrm{OSSB+C}$ signals using an optical filtering scheme. Here a narrowband external fiber Bragg grating (FBG) is used to remove a portion of the optical carrier, leaving only a fraction of the optical carrier power to be detected at the receiver [36]. In this particular investigation, a number of FBGs with 3 dB reflection bandwidths of 2.7 GHz and reflectivity ranging from 3 dB (50%) to 30 dB (99.9%) were used to quantify the optical link performance as a function of modulation efficiency. Fig. 8(a) shows the measured optical spectrum of an $\mathrm{OSSB+C}$ signal carrying 155 Mb/s data at 35 GHz, before and after the FBG with 95% reflectivity that clearly indicates that the optical carrier was suppressed by 14 dB. The corresponding bit-error-rate (BER)

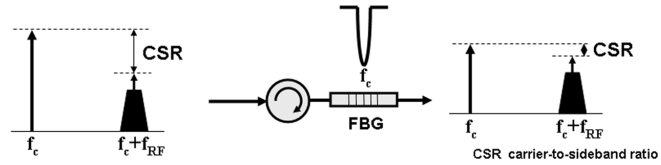

Fig. 7. Technique to improve modulation efficiency of $\mathrm{OSSB+C}$ signal using an FBG.

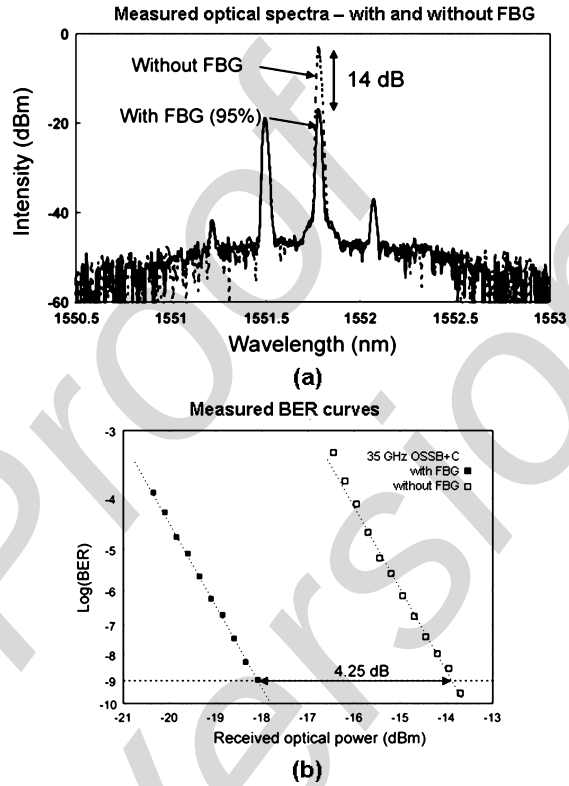

Fig. 8. Measured (a) optical spectra and (b) BER using 95% reflectivity FBG.

curves are shown in Fig. 8(b) with a 4.25 dB improvement in the sensitivity at a $\mathrm{BER} = 10^{-9}$ with the carrier-to-sideband ratio (CSR) decreased by 14 dB [37]. Hence, by reducing the CSR of the $\mathrm{OSSB+C}$ signal, the overall sensitivity of the link can be drastically improved. Studies have shown that the optimum CSR occurs at 0 dB [38]. The situation that an optimum CSR exists for a mm-wave modulated optical signal is due to the interplay between the optical powers in the carrier and sideband. The sensitivity of the link is dependent on the addition of these two parameters, while the BER is dependent on the square root of the product [38]. Therefore, by varying the CSR while maintaining a constant received optical power, the received data current peaks at a $\mathrm{CSR} = 0$ dB which leads to a lower BER and an improved performance. It is important to note here that this technique is envisaged for fiber-wireless networks with passive links. The improvement in receiver sensitivity can be translated to extended optical transmission distance.

D. Base-Station Technologies

To support full-duplex operation in mm-wave fiber-wireless networks, the optical interfaces within the antenna base station have to include optical sources which can be modulated by the

IEEE Proof Web Version

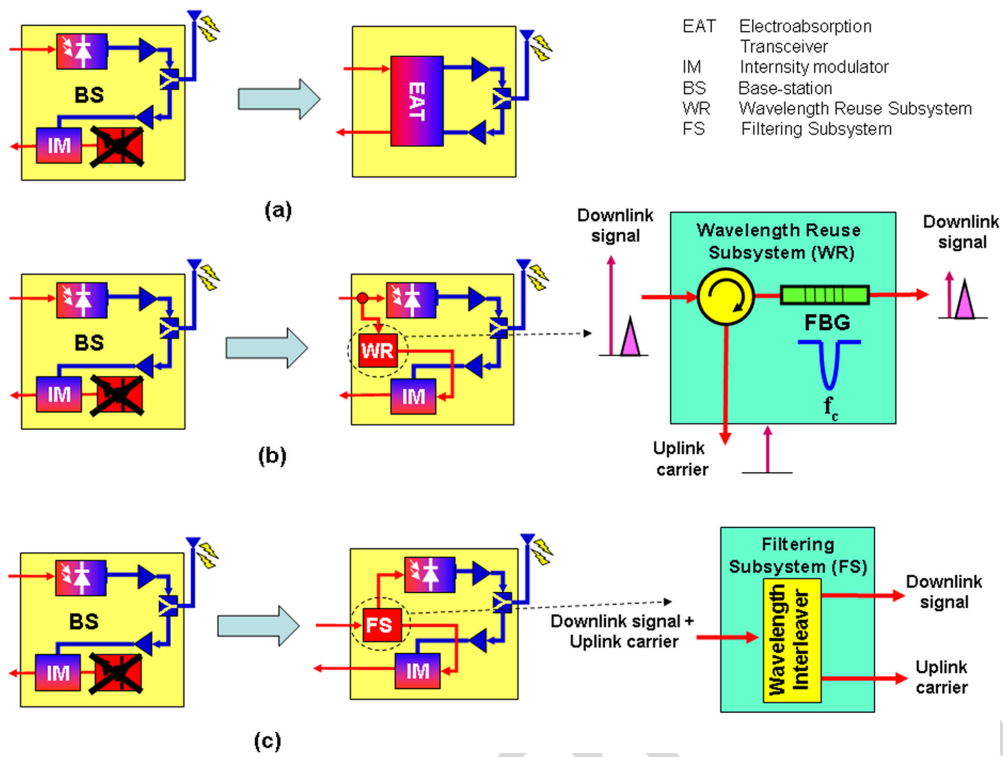

Fig. 9. Laser-free base-station using. (a) electroabsorption transceiver (EAT), (b) wavelength re-use scheme, (c) remote carrier delivery.

mm-wave uplink wireless signals. In addition, optical sources with narrow linewidths at well-specified wavelengths are required at the base stations to minimize phase noise degradation. However this scenario is not an attractive option for uplink signal transmission as ultra-stable, low-cost, narrow linewidth optical sources are difficult to realize. Therefore, there is a significant advantage to completely remove the need for an optical source in the antenna BS. Removing the optical source from the antenna BS also migrates the wavelength assignment and source monitoring functionalities to the CO which further relaxes the stringent requirements on the antenna BS hardware.

The first demonstration of a source-free antenna BS was British Telecom's passive pico cell concept [39] where an electro-absorption modulator (EAM) was used as both the detector and modulator by careful choice of the biasing condition [39]. In this technique, the EAM was optimized independently for two different optical signals to be used as the downlink and uplink carriers. This scheme was further improved and optimized for 60 GHz transmission where the EAM was termed as an electroabsorption transceiver (EAT) [40] as illustrated in Fig. 9(a). Here the EAT replaces the photodetector and uplink modulation where it acts as a photodetector for the downlink signals and as a modulator for the uplink wireless signals. In this scheme, the uplink carrier is remotely delivered from the CO.

Another source-free scheme that has been proposed and demonstrated is called the 'wavelength re-use' technique where a portion of the downlink carrier is extracted and re-used for uplink transmission [41]. Shown in Fig. 9(b) is the schematic of the wavelength re-use technique for $\mathrm{OSSB}+\mathrm{C}$ modulated signals where an optical carrier recovery interface is located within the BS. The optical carrier recovery interface consisting of a 3-port circulator and a narrowband FBG with 50% reflectivity is shown in Fig. 9(b). The incoming downlink $\mathrm{OSSB}+\mathrm{C}$ signal enters the optical carrier recovery interface via port 1 of the circulator where 50% of the optical carrier power is reflected by a FBG with a center wavelength at the optical carrier, which is located at the output of port 2. The remaining 50% of the carrier and the corresponding sideband feed a photodetector and the detected downlink signal enters the base station downlink RF interface for wireless transmission. The reflected optical carrier exits the optical interface via port 3 where it will be reused as the uplink optical carrier. The knowledge of the operating wavelength is sufficient for the design of the FBG making it more flexible in terms of frequency assignment at the base station-air interface.

A more convenient method to establish a source-free BS is to provide the uplink optical carrier remotely from the CO [42], [43]. This scheme is illustrated in Fig. 9(c). The optical source in the BS is replaced by a filtering subsystem that may consist of a wavelength interleaver or narrowband optical fiber. In this case, the uplink carrier is remotely delivered from the CO and the filtering subsystem functions to separate the uplink carrier from the downlink signals. The upstream wireless signals are modulated onto the optical carrier using an external modulator.

E. Optical Frontend Nonlinearity in Millimeter-Wave Fiber-Wireless Links

Another key challenge in implementing mm-wave fiber-wireless systems is the nonlinearity of the optical frontend. It is well-established that in a wireless access network with a multicarrier environment, linearity plays an important role in the achievable

IEEE Proof Web Version

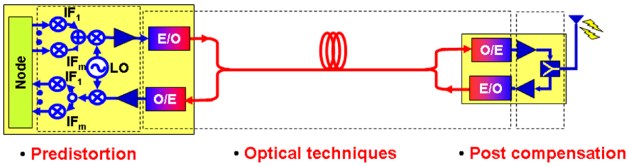

Fig. 10. Different categories of linearization techniques.

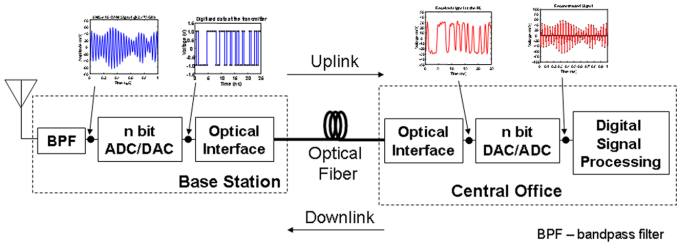

Fig. 11. Schematic of fiber-wireless link deploying digitized RF transport.

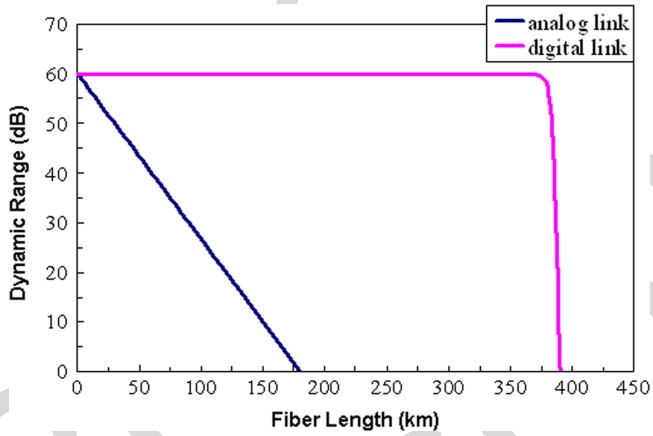

Fig. 12. Dynamic range of fiber-wireless link incorporating analog and digitized RF transport.

system dynamic range. It has been shown that the nonlinearity of the optical frontend in a fiber distributed wireless network limits the overall system dynamic range [44] and this condition worsens due to other fiber nonlinearities as the radio signals propagate through the fiber link [45]. The issue of linearity in fiber-wireless links has been widely investigated. A number of linearization techniques have been demonstrated to combat intermodulation distortion (IMD) products and improve the dynamic range of optical analog links including: optical feedforward [46], [47], gain modulation [48], predistortion [49], [50] and parallel modulator configurations [51]–[53]. These techniques can be generalized into three categories as summarized in Fig. 10, namely predistortion, post-compensation and optical techniques. Predistortion schemes focus on the mitigation of IMD within the frontend. In general the predistortion technique requires a pre-distorter at the source that combats IMD by generating frequency components of the same amplitude but opposite in phase. IMD mitigation using optical techniques includes optical feedforward [46], [47] and an efficient modulator configuration [51]–[53]. The optical feedforward technique has been shown to be effective in suppressing third-order IMD and also reduces the laser relative intensity noise (RIN) over a wide bandwidth [54]. This technique consists of two sections with one determining the error and the other canceling the error [46], [47]. Therefore, it relies on the careful tuning of the amplitudes and phases of the signals to ensure perfect cancellation. Post-compensation on the other hand, focuses on the receiver end and uses estimation and equalization to mitigate IMD via signal processing [55], [56].

Recently an alternative technique has been reported which is based on the transmission of digitized RF signals [57], [58] which benefits from the higher performance of digital optical links. Given that most of the wireless applications use signal bandwidths which are a small fraction of their carrier frequencies, bandpass sampling is an attractive scheme to digitize the wireless signals effectively. Bandpass sampling has the advantage of using a much lower sampling rate which is comparable to the wireless information bandwidth rather than the wireless carrier frequency [59].

Fig. 11 illustrates an optical link based on digital radio-over-fiber (DRoF) transport. The digitization of the wireless signal produces a sampled digital datastream in a serial format that can directly modulate an optical source. This approach enables the use of digital photonic links to transport the wireless signals. In this implementation, only a minimal set of frontend components (i.e., analog-to-digital converter (ADC) and digital-to-analog converter (DAC)) are needed in the antenna BS leaving all signal processing functions to be located in the CO. Given that the IMDs arising from nonlinear electrical-to-optical conversions and issues arising from using analog photonic links can now be completely avoided, an optical link employing digitized RoF transmission can maintain its dynamic range independent of the fiber transmission distance until when the received signal goes below the link sensitivity. Fig. 12 shows the calculated dynamic range of the system as a function of optical transmission distance for both DRoF and analog RoF links. Dynamic range presented here can be interpreted as the ratio of strongest signal to the weakest signal that can be supported without distortion. It can be clearly seen that the dynamic range in the analog link decreases steadily with fiber transmission length while DRoF is able to maintain a constant dynamic range until the transmission distance reaches a certain length. The sharp roll-off observed in Fig. 12 is due to synchronization loss. It is evident that the digitized RF transport offers a distinct advantage over an analog link for RoF signal transport, although the implementation of the DRoF scheme relies heavily on the ADC/DAC technology. Although bandpass sampling enables the use of a lower sampling frequency, the ADC requires the analog bandwidth to be at least equivalent to the wireless carrier frequency. Therefore, for mm-wave fiber-wireless systems, this scheme is still limited by commercially available ADC/DAC technology [60].

IV. Optical Subsystems Interface for WDM-Based Millimeter-Wave Fiber-Wireless Systems

It is well-established that the total capacity and throughput of a mm-wave fiber-wireless system can be greatly enhanced with efficient optical fiber architectures using wavelength-division-multiplexing (WDM) optical networking technology. Much research has been carried out in fiber-wireless networks incorporating WDM with the aim of reusing existing optical infrastruc-

IEEE Proof Web Version

ture. With the incorporation of WDM in mm-wave fiber-wireless approaches, a fast deployment route for these systems may be achieved. By leveraging the optical network infrastructure already existing in the access and metro network domains, unused fibers may be utilized as the means of communications between the CO and the antenna BSs. It is therefore equally important that mm-wave fiber-wireless access technology can coexist with other optical access technologies; being able to merge/integrate within the existing infrastructure and ensure transparency in the remote access nodes. As established in the previous section, the transportation of wavelength-interleaved mm-wave wireless signals in $\mathrm{OSSB} + \mathrm{C}$ and optical carrier suppression formats mitigate the impact of fiber dispersion induced power penalty and also improve the optical spectral usage. In this section, we will provide a review of various optical subsystem and interface designs to enable the seamless integration of WDM based fiber-wireless networks with existing WDM infrastructures.

A. Optical-Add-Drop-Multiplexer for Wavelength-Interleaved Dense-WDM Fiber-Wireless System

Fig. 13 shows a schematic of a WDM fiber-wireless architecture with a primary ring and incorporating both wavelength-interleaving and $\mathrm{OSSB} + \mathrm{C}$ modulation schemes. In such a configuration, an optical interface capable of dropping and adding the dense-WDM wavelength-interleaved (WI) channels is essential at the antenna BS [61]. One recent demonstration of such a multifunctional BS optical interface that supports optical adding and dropping of wavelength-interleaved-dense-WDM (WI-DWDM) channels from the main trunk, while removing the need for an optical source within the BS [61] has been shown. Fig. 14 shows the optical interface based on a 7-port optical circulator in conjunction with a double notch and a single notch fiber Bragg grating. The interface consists of 'IN', 'OUT', 'DOWNLINK DROP', 'λ-REUSE' and 'ADD' ports. Here three RF channels at 37.5 GHz are interleaved such that the spacing between the optical carrier and the adjacent sidebands, which enter the optical interface via port 1 (IN), is 12.5 GHz. The double notch filter at port 2 reflects 100% of the desired downlink optical carrier (λ_2 in this case) and its corresponding sideband, while transmitting the 'thru' channels to port 6 of the circulator which are routed out from the interface via port 7 (OUT). The FBG at port 3 was designed to reflect 50% of the optical carrier at λ_2 while the remaining 50% of the optical carrier and the corresponding sideband are dropped at port 3 (the DOWNLINK DROP). The 50% of the reflected optical carrier at λ_2 is recovered at port 4 (λ-REUSE) and can be re-used as the uplink optical carrier through being modulated by the upstream mm-wave radio signals [41]. The uplink optical signal can be added back to the main stream via port 5 (ADD) and combines with the 'thru' channels and exits via port 7 (OUT).

B. Simultaneous Multiplexing and Demultiplexing Optical Interface for Wavelength-Interleaved Dense-WDM Fiber-Wireless System

The multifunctional optical interface with add-drop capability introduced in Section IV.A is an ideal passive optical add-drop multiplexer in the antenna BS, especially in a ring

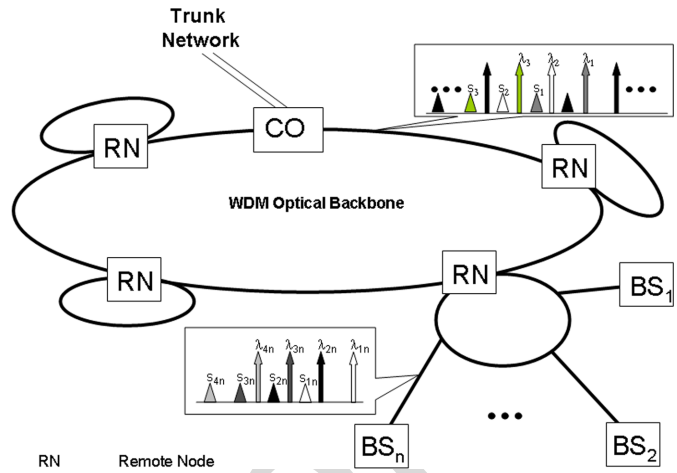

Fig. 13. Schematic diagram of a WDM fiber-wireless ring architecture incorporating $\mathrm{OSSB} + \mathrm{C}$ modulation and wavelength-interleaving schemes.

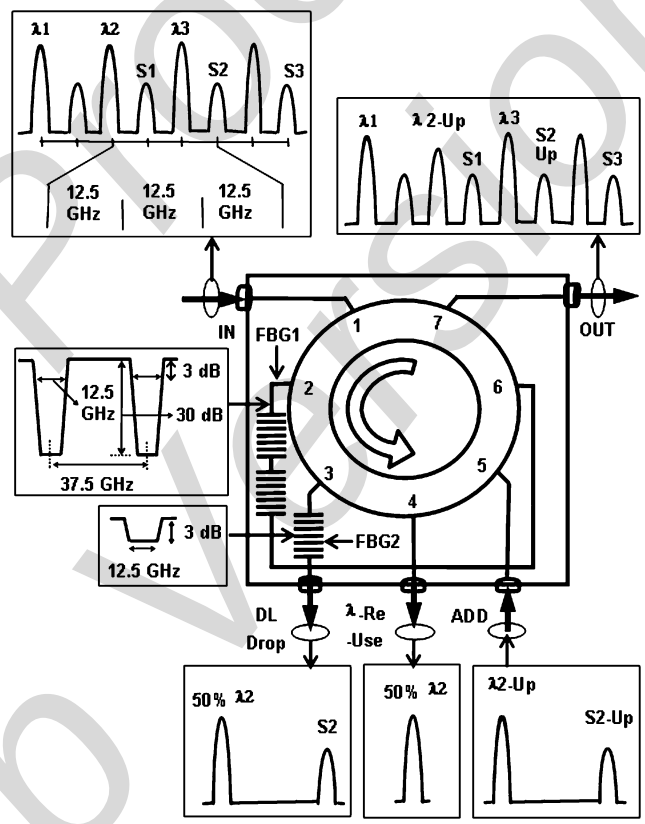

Fig. 14. Multifunctional WDM optical interface with optical add-drop and wavelength re-use functionalities.

architecture. However in a star-tee architecture, an optical interface with simultaneous demultiplexing and multiplexing of several channels is essential in the CO and remote nodes (RNs) of the mm-wave fiber-wireless network. In such an environment, a series of cascaded optical interfaces demonstrated in Section IV.A would be needed which could impose significant performance degradation and limitations in the network dimensioning. Furthermore a series of cascaded interfaces also leads to complex, bulky and expensive demultiplexing/multiplexing subsystems. It is therefore essential to combine these functionalities required in the CO and RNs into a single device

IEEE Proof web version

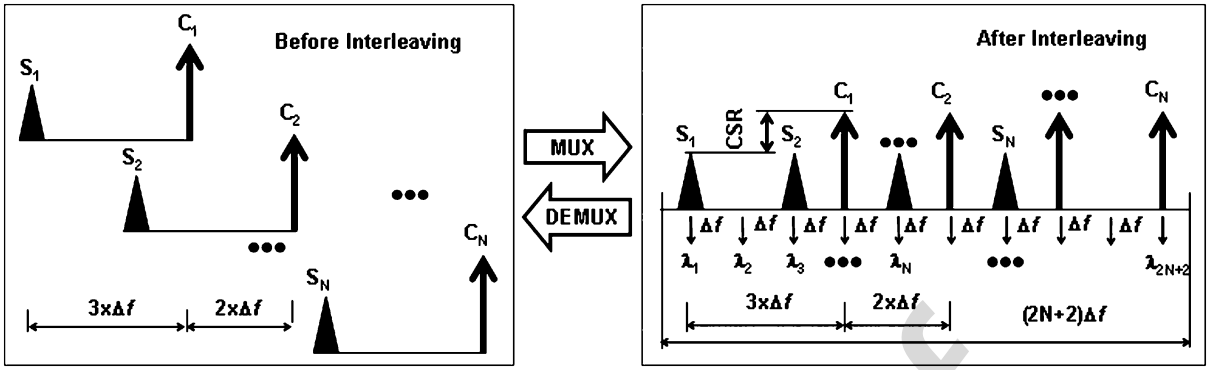

Fig. 15. Schematic depicting the optical spectra of the wavelength-interleaved DWDM mm-wave fiber-wireless channels.

such that cost-effective architectures with reduced complexity can be realized. In addition, it is equally important that passive WDM components in the COs and RNs are transparent to the uplink channels generated by reusing the downlink optical carrier, which allows the BS to be simplified by removing the light source from the uplink path [41].

Simple multiplexing schemes that efficiently interleave DWDM mm-wave fiber-radio channels separated at 25 GHz were proposed in [62]–[64]. A demultiplexing scheme for 25 GHz-separated DWDM mm-wave fiber-radio channels was also proposed in [65], however this scheme requires additional wavelength-selective pre- and post-processing hardware, in addition to custom-developed arrayed waveguide gratings (AWGs). Recently, a simultaneous multiplexing and demultiplexing (MUX/DEMUX) scheme for the CO and the RN in a star-tree fiber-wireless system, which effectively multiplexes and demultiplexes 37.5 GHz-band WI-DWDM mm-wave fiber-radio channels spaced at 25 GHz has been demonstrated [66]. The incorporation of such a scheme in WI-DWDM mm-wave fiber-radio systems can offer efficient multiplexing with improved overall link performance due to a reduction in carrier-sideband-ratio (CSR) as discussed in Section III.C [38]. In addition, the proposed scheme ensures the transparency of the CO and the RN to uplink (UL) channels generated by reusing the downlink (DL) optical carriers, which enables a simple, compact and low cost BS through the complete removal of the UL light source. Fig. 15 shows a schematic of the optical spectra of N optical mm-wave channels before and after interleaving, with a DWDM channel spacing and mm-wave carrier frequency of 2 $\boldsymbol{\Delta} f$ and 3 $\boldsymbol{\Delta} f$, respectively. The optical carriers $C_1, C_2, \ldots C_N$ and their respective modulation sidebands $S_1, S_2, \ldots S_N$ (in OSSB + C modulation format) are interleaved in such a way that the adjacent channel spacing, irrespective of carrier or sideband, becomes $\boldsymbol{\Delta} f$.

Fig. 16(a) shows the schematic of the MUX/DEMUX scheme that simultaneously enables multiplexing and demultiplexing of the proposed WI technique. The MUX/DEMUX comprises a $(2\mathrm{N}+2) \times (2\mathrm{N}+2)$ AWG with a channel bandwidth $\leq \boldsymbol{\Delta} f$ and a channel spacing of $\boldsymbol{\Delta} f$, in conjunction with multiple optical circulators (OCs) and optical isolators (OIs). The input (A) and output (B) ports of the arrayed waveguide grating (AWG), reciprocal in nature, are numbered from 1 to $2\mathrm{N}+2$. The characteristic matrix of the AWG that governs the distribution of different channels at various ports is tabulated in Fig. 16(b). For clarity the proposed scheme is considered to be located at a RN where the UL channels are multiplexed and the DL channels are demultiplexed simultaneously. As shown in Fig. 16(a), the DL WI-DWDM channels from the feeder network enter the RN, are split by a 3 dB coupler, and pass through circulators $\mathrm{OC_{D1}}$ and $\mathrm{OC_{D2}}$ before entering the AWG via the ports $\mathrm{A_1}$ and $\mathrm{A_4}$. The input ports, $\mathrm{A_1}$ and $\mathrm{A_4}$ were selected in such a way that the optical carriers $C_{D1}, C_{D2}, \ldots C_{DN}$ and their respective modulation sidebands $S_{D1}, S_{D2}, \ldots S_{DN}$ are demultiplexed together and exit the AWG via the odd-numbered output ports $\mathrm{B_1} - \mathrm{B_{2N-1}}$ followed by $\mathrm{OC_{M1}} \ldots\ldots \mathrm{OC_{MN}}$, respectively. The circulators $\mathrm{OC_{D1}}, \mathrm{OC_{D2}}$, and $\mathrm{OC_{M1}} \ldots\ldots \mathrm{OC_{MN}}$ work as the means for combining/separating the DL and UL channels to/from a specific port of the AWG, and routing them to the destination accordingly.

In the UL direction, the OSSB + C modulated optical mm-wave channels $(\mathrm{S_{U1}}, \mathrm{C_{U1}}), (\mathrm{S_{U2}}, \mathrm{C_{U2}}), \ldots\ldots\ldots (\mathrm{S_{UN}}, \mathrm{C_{UN}})$, generated by either using the optical carriers that correspond to wavelengths spaced at multiples of the Free Spectral Range (FSR) of the AWG from the DL optical carriers, or by reusing the DL optical carriers recovered by applying a wavelength reuse technique ($\lambda_{\mathrm{UL}} = \lambda_{\mathrm{DL}} \pm \mathrm{n} \times \mathrm{FSR}$, where $\mathrm{n} = 0, 1, 2, 3 \ldots$ etc.), are applied to the AWG via the ports $\mathrm{B_1} - \mathrm{B_{2N-1}}$ followed by the circulators $\mathrm{OC_{M1}} \ldots\ldots \mathrm{OC_{MN}}$. Due to the reciprocal and cyclic characteristics of the AWG, the UL optical carriers and their respective modulation sidebands combine at ports $\mathrm{A_4}$ and $\mathrm{A_1}$, respectively. The composite UL carriers $\mathrm{C_{U1}}, \mathrm{C_{U2}}, \ldots \mathrm{C_{UN}}$ at $\mathrm{A_4}$ are then passed through $\mathrm{OC_{D2}}$ and looped back to the AWG through port $\mathrm{B_2}$ that redistributes the carriers respectively to the odd-numbered $\mathrm{A_{3,}}, \mathrm{A_5}, \mathrm{A_7} \ldots \mathrm{A_{(2N+1)}}$ ports, starting with $\mathrm{A_3}$. To realize the desired interleaving for the UL channels, the distributed UL carriers $\mathrm{C_{U1}}, \mathrm{C_{U2}}, \ldots \mathrm{C_{UN}}$ are again looped back to the AWG via the even-numbered $\mathrm{B_4}, \mathrm{B_6}, \mathrm{B_8}, \ldots \mathrm{B_{(2N+2)}}$ ports, starting with $\mathrm{B_4}$ and the resulting outcome comprises the UL carriers and their respective modulation sidebands interleaved at port $\mathrm{A_1}$ (similar to the spectrum after multiplexing, shown in Fig. 15), which are then routed to the fiber feeder network via the $\mathrm{OC_{D1}}$.

In Fig. 16(a), the multiple loop-backs of the UL carriers through the AWG reduce the CSR of the interleaved UL

IEEE Proof Web Version

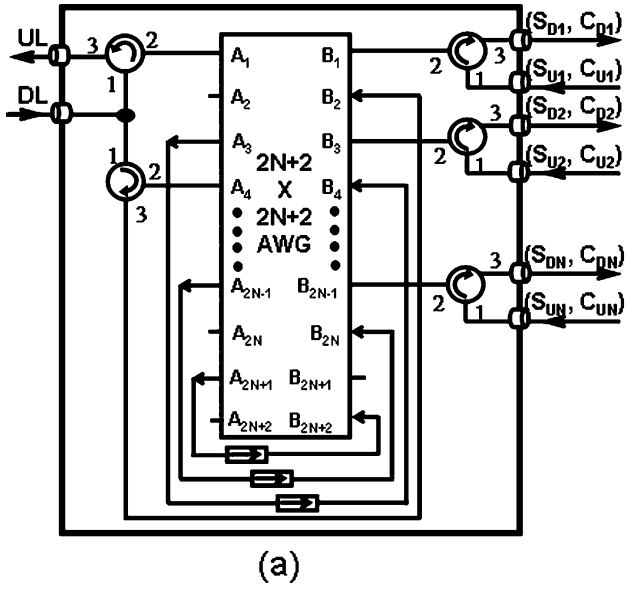

Characteristics Matrix of 2N+2 x 2N+2 AWG

I \ O	B_1	B_2	B_3	•••	B_{N-1}	B_N	B_{N+1}	•••	B_{2N}	B_{2N+1}	B_{2N+2}
A_1	λ_1	λ_2	λ_3		λ_{N-1}	λ_N	λ_{N+1}		λ_{2N}	λ_{2N+1}	λ_{2N+2}
A_2	λ_2	λ_3	λ_4		λ_N	λ_{N+1}	λ_{N+2}		λ_{2N+1}	λ_{2N+2}	λ_1
A_3	λ_3	λ_4	λ_5		λ_{N+1}	λ_{N+2}	λ_{N+3}		λ_{2N+2}	λ_1	λ_2
⋮											
A_{N-1}	λ_{N-1}	λ_N	λ_{N+1}		λ_{2N-3}	λ_{2N-2}	λ_{2N-1}		λ_{N-4}	λ_{N-3}	λ_{N-2}
A_N	λ_N	λ_{N+1}	λ_{N+2}		λ_{2N-2}	λ_{2N-1}	λ_{2N}		λ_{N-3}	λ_{N-2}	λ_{N-1}
A_{N+1}	λ_{N+1}	λ_{N+2}	λ_{N+3}		λ_{2N-1}	λ_{2N}	λ_{2N+1}		λ_{N-2}	λ_{N-1}	λ_N
⋮											
A_{2N}	λ_{2N}	λ_{2N+1}	λ_{2N+2}		λ_{N-4}	λ_{N-3}	λ_{N-2}		λ_{2N-3}	λ_{2N-2}	λ_{2N-1}
A_{2N+1}	λ_{2N+1}	λ_{2N+2}	λ_1		λ_{N-3}	λ_{N-2}	λ_{N-1}		λ_{2N-2}	λ_{2N-1}	λ_{2N}
A_{2N+2}	λ_{2N+2}	λ_1	λ_2		λ_{N-2}	λ_{N-1}	λ_N		λ_{2N-1}	λ_{2N}	λ_{2N+1}

(b)

Fig. 16. Simultaneous multiplexing and demultiplexing of wavelength interleaved channels in a DWDM mm-wave fiber-wireless network: (a) DEMUX/MUX scheme using $2N + 2 \times 2N + 2$ AWG and (b) the input-output characteristics matrix of AWG.

channels by as much as twice the insertion loss $(2 \times \mathrm{IL})$ of the AWG (typically 4–5 dB), which is 8–10 dB. To minimize the effects of the unwanted signals from the even-numbered ports, B_4 to B_{2N+2}, the loop-back paths of the redistributed optical carriers were provided with directional optical isolators that route only the redistributed UL carriers to the AWG and suppress the remaining unwanted signals. Thus, the proposed simultaneous multiplexing and demultiplexing scheme enables efficient multiplexing of the WI-DWDM mm-wave channels in the UL direction, while in the DL direction the circuit also demultiplexes the WI-DWDM channels very effectively.

V. Optical-Wireless Heterogeneous Access Network

In this section, we focus on the role of fiber-wireless in future telecommunication scenarios. Fiber-wireless technology may play a role in high-speed in-building communication and also the merging with other existing wired technology.

A. In-Building Short-Range Application

Extensive research has been carried out in the design of picocellular networks incorporating a fiber-wireless infrastructure for the distribution of in-building wireless signals [67]–[70]. By reducing the cell size and limiting the number of users per cell, this scheme is able to support very high data rate transmission per user especially in a dense in-building scenario. It is interesting to note that due to the relatively short distances in a building; most of the optical distribution for in-building architectures uses multimode fiber.

One particular solution for an in-building picocellular network is shown in Fig. 17, demonstrated by Corning, USA, for the distribution of Wi-Fi signals (IEEE 802.11) [67]. A large number of densely packed picocells are connected via an optical backbone of multimode fiber to a CO. In this demonstration, low-cost VCSEL technology was used to further improve the cost-effectiveness of the overall architecture [67], [68].

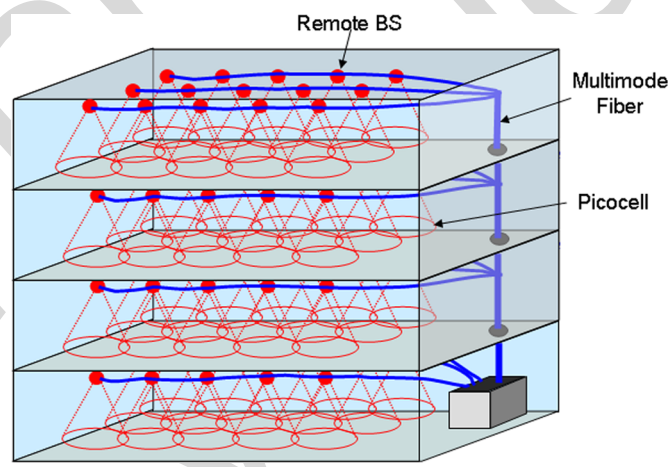

Fig. 17. Schematic of densely packed picocellular layout for in-building high-speed communications.

B. MultiBand Transmission

With various last mile solutions emerging, it is essential for RF fiber-wireless access technology to coexist with other optical access technologies, thereby being able to merge/integrate within the existing infrastructure and ensure transparency in the remote access nodes. Much research has been targeted towards wireless signal distribution over passive-optical-networks (PONs) using subcarrier multiplexing to isolate the wired and wireless signals [71]–[73]. Various wireless standards including 3G, WiFi and WiMAX have been demonstrated overlaying on the PON infrastructure [71]–[73]. Apart from the distribution of wireless signals at lower microwave frequencies, it is also beneficial to develop an integrated optical access infrastructure to simultaneously distribute multiple signal bands. A number of simultaneous modulation techniques have been proposed which enable baseband (BB), IF and RF technologies to be seamlessly

IEEE Proof Web Version

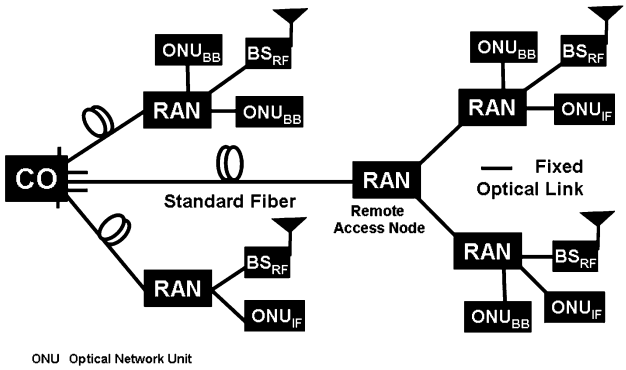

Fig. 18. Schematic of an integrated optical access network.

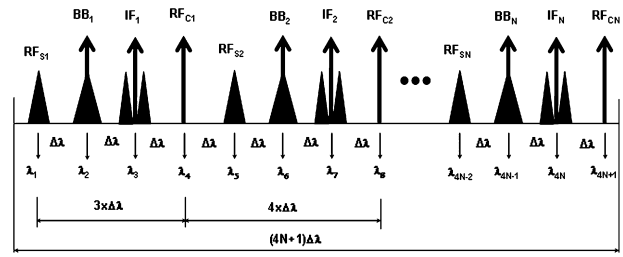

Fig. 19. Schematic showing the optical spectrum of the multiplexed optical RF, IF and baseband signals for optical access integration.

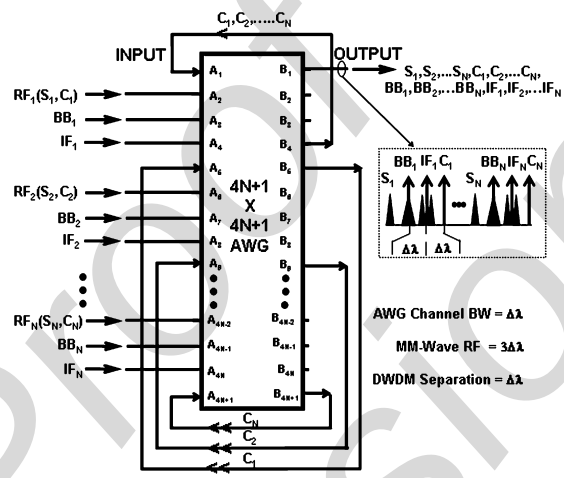

Fig. 20. Schematic of the hybrid multiplexing of RF, IF and baseband data for integrated optical access environment.

combined and distributed together [74]–[78]. However, the performance of these methods has been limited by the nonlinearity as well as the optimum modulating conditions of the modulators. Also, these techniques require significant changes both in the existing mini switching centers (MSCs) and the remote access nodes (RANs). An alternative approach to realizing an integrated DWDM network in the metro and higher network domains is to incorporate a number of MSCs suitable for the role of a CO feeding clusters of BSs that service the RF fiber-radio system [79]. This technique has the limitation of requiring a dedicated optical network in the access domain. However, if the passive WDM components (e.g., multiplexers, demultiplexers, OADMs) in the existing MSCs and RANs can be provisioned instead to support RF as well as other conventional BB and IF access technologies thereby avoiding significant changes in the existing setup, an effective integrated optical access network can be easily realized. Shown in Fig. 18 is the schematic of one possible solution for an integrated optical access incorporating RF, BB, and IF in a WDM environment highlighting the merging of wireless and wireline optical access applications.

One of the many hybrid multiplexing schemes that effectively multiplexes the optical RF, BB and IF signals in a DWDM access network has been proposed and demonstrated in [70]. Fig. 19 shows the optical spectrum of the proposed multiplexing scheme comprising N channels for each of the RF, BB and IF signals, with a DWDM channel separation of $\boldsymbol{\Delta}\lambda$. The RF carrier frequency is an integer multiple of the DWDM channel separation ($\lambda_{\mathrm{RF}} = \mathrm{n} \times \boldsymbol{\Delta}\lambda$, where $\mathrm{n} = 1, 2, 3, \ldots$), for instance, 3 $\boldsymbol{\Delta}\lambda$. The signals are multiplexed in such a way that after multiplexing, the adjacent channel spacing, irrespective of RF, BB or IF signals, is $\boldsymbol{\Delta}\lambda$. Fig. 20 depicts the configuration of the proposed multiplexing scheme that realizes such a hybrid multiplexed spectrum with the input and output spectra shown in the insets. It consists of a $(4\mathrm{N}+1) \times (4\mathrm{N}+1)$ AWG with bandwidth $\boldsymbol{\Delta}\lambda$ equal to the adjacent channel spacing of the desired multiplexing scheme. The input (A) and output (B) ports of the AWG are numbered from 1 to $4\mathrm{N}+1$. The optically modulated RF, BB, and IF input signals enter the AWG starting with port A_2 to $\mathrm{A}_{4\mathrm{N}}$, leaving the 5th, 9th, 13th, $\ldots, (4\mathrm{N}+1)$ th ports unused. The RF channels are modulated in $\mathrm{OSSB} + \mathrm{C}$ modulation format. The AWG combines all the modulation sidebands $\mathrm{S}_1, \mathrm{S}_2, \ldots, \mathrm{S}_\mathrm{N}$ of the RF channels as well as the BB and IF channels at the output port B_1. Due to the cyclic characteristics of the AWG, the optical carriers $\mathrm{C}_1, \mathrm{C}_2, \ldots, \mathrm{C}_\mathrm{N}$ of the RF channels also exit as a composite signal via the output port B_4. The composite carriers are then looped back to the AWG through the input port A_1 that redistributes the carriers to the 5th, 9th, 13th, $\ldots, (4\mathrm{N}+1)$th output ports. To realize the desired multiplexing, the distributed carriers are again looped back to the AWG via the unused input ports and the resultant output at port B_1 is the RF, BB, and IF signals multiplexed with the BB and IF channels interleaved between the optical carrier and the modulation sideband of the RF channels. The multiplexed spectrum can be seen in the insets of Fig. 20. As before, due to the loop-backs the optical carriers of the RF channels are suppressed by as much as twice the insertion loss of the AWG compared to the modulation sidebands. Thus, the proposed multiplexing scheme enables a carrier subtraction technique that reduces the carrier-to-sideband ratio of the RF channels by 8 to 10 dB.

VI. Conclusion

Millimeter-wave fiber-wireless technology has been actively pursued and investigated in the past two decades. In this paper, we have provided an overview of the research progress in this area ranging from signal transportation, impairments to WDM based subsystem interfaces and optical-wireless integrated access infrastructure. In presenting this overview, we have focused the discussions on techniques and technologies that have been investigated and demonstrated for the implementation of high-performance mm-wave fiber-wireless systems. We have

IEEE Proof Web Version

also touched upon the importance of optical-wireless integration for future heterogeneous access infrastructure for seamless distribution of multiple bands signal over the same optical platform.

ACKNOWLEDGMENT

The authors would like to acknowledge the contribution of Dr. M. Attygalle of Defence Science and Technology Organisation (DSTO), Australia, for some of the work presented in this paper. They also would like to thank Dr. M. Sauer of Corning, for the figure used in this paper.

REFERENCES

[1] T. S. Rappaport, *Wireless Communications: Principles & Practice*, 2nd ed. Englewood Cliffs, NJ: Prentice Hall, 2002.

[2] ***[Page numbers?]***H. Ogawa, "Millimeter-wave wireless personal network systems," in *Proc. IEEE Radio Frequency Integrated Circuits (RFIC) Symp.*, Jun. 2006.

[3] J. J. O'Reilly, P. M. Lane, R. Heidemann, and R. Hofstetter, "Optical generation of very narrow linewidth millimetre wave signals," *Electron. Lett.*, vol. 28, no. 5, pp. 2309–2311, 1992.

[4] S. Levy, R. Nagarajan, R. J. Helkey, P. Humphrey, and J. E. Bowers, "Millimetre-wave fibre-optic PSK subcarrier transmission at 35 GHz over 6.3 km using a grating external cavity semiconductor laser," *Electron. Lett.*, vol. 29, no. 8, pp. 690–691, 1993.

[5] G. H. Smith and D. Novak, "Broadband millimeter-wave fiber-radio network incorporating remote up/downconversion," in *Proc. IEEE MTTS*, Baltimore, MD, 1998, pp. 1509–1512, TH3C-1.

[6] C. Lim, A. Nirmalathas, D. Novak, R. Waterhouse, and G. Yoffe, "Millimeter-wave broadband fiber-wireless system incorporating baseband data transmission over fiber and remote LO delivery," *J. Lightw. Technol.*, vol. 18, no. 10, pp. 1355–1363, Oct. 2000.

[7] G. J. Meslener, "Chromatic dispersion induced distortion of modulated monochromatic light employing direct detection," *IEEE J. Quantum Electron.*, vol. QE-20, no. 10, pp. 1208–1216, 1984.

[8] H. Schmuck, "Comparison of optical millimeter-wave system concepts with regard to chromatic dispersion," *Electron. Lett.*, vol. 31, no. 21, pp. 1848–1849, 1995.

[9] U. Gliese, S. Norskov, and T. N. Nielsen, "Chromatic dispersion in fiber-optic microwave and millimeter-wave links," *IEEE Trans. Microw. Theory Tech.*, vol. 44, no. 10, pp. 1716–1724, 1996.

[10] C. Lim, A. Nirmalathas, D. Novak, R. Waterhouse, and G. Yoffe, "A WDM architecture for millimeter-wave fiber-radio systems incorporating baseband transmission," in *Proc. MWP'99*, Melbourne, Australia, 1999, pp. 127–130.

[11] E. Skafidas, F. Zhang, B. Yang, B. N. Wicks, Z. Liu, C. M. Ta, Y. Mo, K. Wang, G. Felic, P. Nadagouda, T. Walsh, W. Shieh, I. Mareels, and R. J. Evans, "A 60-GHz transceiver on CMOS," in *Proc. Microw. Photon. ointly Held With the 2008 Asia-Pacific Microw. Photon. Conf. (MWP2008/APMP2008)*, Gold Coast, Australia, 2008, pp. 306–309.

[12] B. Yang, Y. Mo, K. Wang, Y. Feng, B. Wicks, C. Ta-Minh, F. Zhang, Z. Liu, C. Liu, G. Felic, P. Nadagouda, T. Walsh, and E. Skafidas, "Implementation of a gigabit per second millimetre-wave transceiver on CMOS," in *Proc. Int. Conf. Wireless Broadband Ultra Wideband Commun. (AusWireless2007)*, 2007, pp. 71–71.

[13] R. Soref, "The past, present, and future of silicon photonics," *IEEE J. Sel. Topics Quantum Electron.*, vol. 12, no. 6, pp. 1678–1687, Nov./Dec. 2006.

[14] R. Hofstetter, H. Schmuck, and R. Heidemann, "Dispersion effects in optical millimeter-wave systems using self-heterodyne method for transport and generation," *IEEE Trans. Microw. Theory Tech.*, vol. 43, no. 9, pp. 2263–2269, Sep. 1995.

[15] G. H. Smith, D. Novak, and Z. Ahmed, "Technique for optical SSB generation to overcome dispersion penalties in fibre-radio systems," *Electron. Lett.*, vol. 33, no. 1, pp. 74–75, 1997.

[16] R. A. Griffin, P. M. Lane, and J. J. O'Reilly, "Dispersion-tolerant subcarrier data modulation of optical millimetre-wave signals," *Electron. Lett.*, vol. 32, no. 24, pp. 2258–2260, 1996.

[17] J. M. Fuster, J. Marti, and J. L. Corral, "Chromatic dispersion effects in electro-optical upconverted millimetre-wave fibre optic links," *Electron. Lett.*, vol. 33, no. 23, pp. 1969–1970, 1997.

[18] ***[Month?]***Z. Jia, J. Yu, and G.-K. Chang, "A full-duplex radio-over-fiber system based on optical carrier suppression and reuse," *IEEE Photon. Technol. Lett.*, vol. 18, no. 16, pp. 1726–1728, 2006.

[19] J. Park, W. V. Sorin, and K. Y. Lau, "Elimination of the fibre chromatic dispersion penalty on 1550 nm millimetre-wave optical transmission," *Electron. Lett.*, vol. 33, no. 6, pp. 512–513, 1997.

[20] ***[Month?][Month?]***K. Yonenaga and N. Takachio, "A fiber chromatic dispersion compensation technique with an optical SSB transmission in optical homodyne detection systems," *IEEE Photon. Technol. Lett.*, vol. 5, no. 8, pp. 949–951, 1993.

[21] ***[Month?]***E. Vourch, D. Le Berre, and D. Herve, "Lightwave single sideband wavelength self-tunable filter using InP:Fe crystal for fiber-wireless systems," *IEEE Photon. Technol. Lett.*, vol. 14, no. 2, pp. 194–196, 2002.

[22] J. Capmany, D. Pastor, P. Munoz, S. Sales, B. Ortega, and A. Martinez, "WDM-SSB generation and dispersion mitigation in radio over fiber systems with improved performance using an AWG multiplexer with flat top resonances," in *Proc. Microw. Photon.*, Budapest, Hungary, 2003, pp. 39–42.

[23] J. Marti, J. M. Fuster, and R. I. Laming, "Experimental reduction of chromatic dispersion effects in lightwave microwave/millimetre-wave transmissions using tapered linearly chirped fibre gratings," *Electron. Lett.*, vol. 33, no. 13, pp. 1170–1171, 1997.

[24] ***[Month?]***F. Ramos, J. Marti, V. Polo, and J. M. Fuster, "On the use of fiber-induced self-phase modulation to reduce chromatic dispersion effects in microwave/millimeter-wave optical systems," *IEEE Photon. Technol. Lett.*, vol. 10, no. 10, pp. 1473–1475, 1998.

[25] ***[Month?]***F. Ramos, J. Marti, and V. Polo, "Compensation of chromatic dispersion effects in microwave/millimeter-wave optical systems using four-wave-mixing induced in dispersion-shifted fibers," *IEEE Photon. Technol. Lett.*, vol. 11, no. 9, pp. 1171–1173, 1999.

[26] P. C. Won, W. Zhang, and J. A. R. Williams, "Self-phase modulation dependent dispersion mitigation in high power SSB and $\mathrm{DSB} + \mathrm{dispersion}$ compensated modulated radio-over-fiber links," in *Proc. IEEE MTTS IMS*, 2006, pp. 1947–1950.

[27] J. Marti and F. Ramos, "Compensation for dispersion-induced nonlinear distortion in subcarrier systems using optical-phase conjugation," *Electron. Lett.*, vol. 33, no. 9, pp. 792–794, 1997.

[28] C. Lim, A. Nirmalathas, D. Novak, R. S. Tucker, and R. B. Waterhouse, "Technique for increasing optical spectral efficiency in millimeter-wave WDM fiber-radio," *Electron. Lett.*, vol. 37, no. 16, pp. 1043–1045, 2001.

[29] H. Toda, T. Yamashita, K.-I. Kitayama, and T. Kuri, "A DWDM mm-wave fiber-radio system by optical frequency interleaving for high spectral efficiency," in *Proc. MWP*, Long Beach, CA, 2001, pp. 85–88.

[30] C. Lim, A. Nirmalathas, D. Novak, and R. B. Waterhouse, "Capacity analysis for WDM fiber-radio backbones with star-tree and ring architecture incorporating wavelength interleaving," *J. Lightw. Technol.*, vol. 21, no. 12, pp. 3308–3315, Dec. 2003.

[31] K. J. Williams and R. D. Esman, "Stimulated Brillouin scattering for improvement of microwave fibre-optic link efficiency," *Electron. Lett.*, vol. 30, no. 23, pp. 1965–1966, 1994.

[32] S. Tonda-Goldstein, D. Dolfi, J.-P. Huignard, G. Charlet, and J. Chazelas, "Stimulated brillouin scattering for microwave signal modulation depth increase in optical links," *Electron. Lett.*, vol. 36, no. 11, pp. 944–946, 2000.

[33] M. J. LaGasse, W. Charczenko, M. C. Hamilton, and S. Thaniyavarn, "Optical carrier filtering for high dynamic range fibre optic links," *Electron. Lett.*, vol. 30, no. 25, pp. 2157–2158, 1994.

[34] R. D. Esman and K. J. Williams, "Wideband efficiency improvement of fiber optic systems by carrier subtraction," *IEEE Photon. Technol. Lett.*, vol. 7, no. 2, pp. 218–220, 1995.

[35] H. Toda, T. Yamashita, T. Kuri, and K. Kitayama, "25-GHz channel spacing DWDM multiplexing using an arrayed waveguide grating for 60-GHz band radio-on-fiber systems," in *Proc. Microwave Photon.*, Budapest, Hungary, 2003, pp. 287–290.

[36] M. Attygalle, C. Lim, G. J. Pendock, A. Nirmalathas, and G. Edvell, "Transmission improvement in fiber wireless links using fiber Bragg gratings," *IEEE Photonics Technol. Lett.*, vol. 17, no. 1, pp. 190–192, Jan. 2005.

[37] M. Attygalle, C. Lim, and A. Nirmalathas, "Extending optical transmission distance in fiber wireless links using passive filtering in conjunction with optimized modulation," *J. Lightw. Technol.*, vol. 24, no. 4, pp. 1703–1709, Apr. 2006.

IEEE Proof
webversion

[38] C. Lim, M. Attygalle, A. Nirmalathas, D. Novak, and R. Waterhouse, "Optical modulation depth analysis for improving transmission performance in fiber-radio links," *IEEE Trans. Microw. Theory Tech.*, vol. 54, no. 5, pp. 2181–2187, May 2006.

[39] D. Wake, D. Johansson, and D. G. Moodie, "Passive pico-cell—New in wireless network infrastructure," *Electron. Lett.*, vol. 33, no. 5, pp. 404–406, 1997.

[40] A. Stohr, K. Kitayama, and D. Jager, "Full-duplex fiber-optic RF subcarrier transmission using a dual-function modulator/photodetector," *IEEE Trans. Microw. Theory Tech.*, vol. 47, no. 7, pp. 1338–1341, Jul. 1999.

[41] A. Nirmalathas, D. Novak, C. Lim, and R. B. Waterhouse, "Wavelength re-use in the WDM optical interface of a millimeter-wave fiber wireless antenna base-station," *IEEE Trans. Microw. Theory Tech.*, vol. 49, no. 10, pp. 2006–2012, Oct. 2001.

[42] ***[Month?]***L. Chen, H. Wen, and S. Wen, "A radio-over-fiber system with a novel scheme for millimeter-wave generation and wavelength reuse for up-link connection," *IEEE Photon. Technol. Lett.*, vol. 18, no. 19, pp. 2056–2058, 2006.

[43] J. Yu, Z. Jia, T. Wang, and G.-K. Chang, "A novel radio-over-fiber configuration using optical phase modulator to generate an optical mm-wave and centralized lightwave for uplink connection," *IEEE Photon. Technol. Lett.*, vol. 19, no. 3, pp. 140–142, 2007.

[44] T. Kurniawan, A. Nirmalathas, C. Lim, D. Novak, and R. Waterhouse, "Performance analysis of optimized millimeter-wave fiber radio links," *IEEE Trans. Microw. Theory Tech.*, vol. 54, no. 2, pp. 921–928, Feb. 2006.

[45] W. H. Chen and W. I. Way, "Multichannel single-sideband SCM/DWDM transmission systems," *J. Lightw. Technol.*, vol. 22, no. 7, pp. 1679–1693, 2004.

[46] ***[Month?]***S.-H. Park and Y.-W. Choi, "Significant suppression of the third intermodulation distortion in transmission system with optical feedback forward linearized transmitter," *IEEE Photonics Technol. Lett.*, vol. 17, no. 6, pp. 1280–1282, 2005.

[47] ***[Month?]***T. Ismail, C.-P. Liu, J. E. Mitchell, and A. J. Seeds, "High-dynamic-range wireless-over-fiber link using feedforward linearization," *J. Lightw. Technol.*, vol. 25, no. 11, pp. 3274–3282, 2007.

[48] S. H. Lee, J. M. Kang, Y. Y. Won, H. C. Kwon, and S. K. Han, "Linearization of RoF optical source by using light-injected gain modulation," in *Proc. Microw. Photon.* , Seoul, Korea, 2005, pp. 265–268.

[49] ***[Month?]***L. Roselli, V. Borgioni, F. Zepparelli, F. Ambrosi, M. Comez, P. Faccin, and A. Cassini, "Analog laser predistortion for multiservice radio-over-fiber systems," *J. Lightw. Technol.*, vol. 21, no. 5, pp. 1211–1223, 2003.

[50] A. R. Shah and B. Jalali, "Adaptive equalisation for broadband predistortion linearisation of optical transmitters," *IEE Proc. Optoelectronics*, vol. 152, no. 1, pp. 16–32, 2005.

[51] ***[Month?]***A. Djupsjobacka, "A linearization concept for integrated-optic modulators," *IEEE Photon. Technol. Lett.*, vol. 4, no. 8, pp. 869–872, 1992.

[52] H. Skeie and R. Johnson, "Linearization of electro-optic modulators by a cascade coupling of phase modulating electrodes," *Proc. SPIE-Int. Soc. Opt. Eng.*, vol. 1583, pp. 153–164, 1991.

[53] ***[Month?]***S. Korotky and R. DeRidder, "Dual parallel modulation schemes for low-distortion analog optical transmission," *IEEE J. Sel. Areas Commun.*, vol. 8, pp. 1377–1381, 1990.

[54] L. S. Fock and R. S. Tucker, "Simultaneous reduction of intensity noise and distortion in semiconductor lasers by feed-forward compensation," *Eletron. Lett.*, vol. 27, no. 14, pp. 1297–1299, 1991.

[55] X. N. Fernando and A. B. Sesay, "Fibre-wireless channel estimation using correlation properties of PN sequences," *Can. J. Elect. Comp. Eng.*, pp. 43–47, 2001.

[56] S. A. Fechtel and H. Meyr, "An investigation of channel estimation and equalization techniques for moderately rapid fading HF-channels," in *Proc. IEEE Int. Conf. Commun.*, 1991, pp. 768–772.

[57] P. A. Gamage, A. Nirmalathas, C. Lim, E. Wong, D. Novak, and R. Waterhouse, "Experimental demonstration of digitized RF transport over optical fiber links," in *Proc. 2008 IEEE Int. Topical Meeting MWP2008/APMP2008*, Gold Coast, Australia, Oct. 2008, pp. 15–18.

[58] ***[Page numbers?]***Y. Yang, C. Lim, P. Gamage, and A. Nirmalathas, "Demonstration and performance analysis of an uplink based on digitized RF-over-fiber signal transport," in *Proc. APMP2009*, Beijing, China, 2009.

[59] D. M. Akos, M. Stockmaster, J. B. Y. Tsui, and J. Caschera, "Direct bandpass sampling of multiple distinct RF signals," *IEEE Trans. Commun.*, vol. 47, no. 7, pp. 983–988, 1999.

[60] G. C. Valley, "Photonic analog-to-digital converters," *Opt. Exp.*, vol. 15, no. 5, pp. 1955–1982, 2007.

[61] ***[Month?]***M. Bakaul, A. Nirmalathas, and C. Lim, "Multifunctional WDM optical interface for millimeter-wave fiber-radio antenna base station," *J. Lightw. Technol.*, vol. 23, no. 3, pp. 1210–1218, 2005.

[62] H. Toda, T. Yamashita, T. Kuri, and K. Kitayama, "25-GHz channel spacing DWDM multiplexing using an arrayed waveguide grating for 60-GHz band radio-on-fiber systems," in *Proc. Microw. Photon. (MWP)*, Budapest, Hungary, 2003, pp. 287–290.

[63] M. Bakaul, A. Nirmalathas, C. Lim, D. Novak, and R. Waterhouse, "Simplified multiplexing scheme for wavelength-interleaved DWDM millimetre-wave fiber-radio systems," in *Proc. ECOC 2005*, Glasgow, U.K., 2005, Th1.4.4..

[64] M. Bakaul, A. Nirmalathas, C. Lim, D. Novak, and R. B. Waterhouse, "Efficient multiplexing scheme for wavelength-interleaved DWDM millimeter-wave fiber-radio systems," *IEEE Photon. Technol. Lett.*, vol. 17, no. 12, pp. 2718–2720, Dec. 2005.

[65] ***[Month?]***H. Toda, T. Yamashita, T. Kuri, and K. I. Kitayama, "Demultiplexing using an arrayed-waveguide grating for frequency-interleaved DWDM millimeter-wave radio-on-fiber systems," *J. Lightw. Technol.*, vol. 21, no. 8, pp. 1735–1741, 2003.

[66] M. Bakaul, A. Nirmalathas, C. Lim, D. Novak, and R. B. Waterhouse, "Simultaneous multiplexing and demultiplexing of wavelength-interleaved channels in DWDM millimeter-wave fiber-radio networks," *J. Lightw. Technol.*, vol. 24, no. 9, pp. 3341–3352, Sep. 2006.

[67] ***[Month?]***M. Sauer, A. Kobyakov, and J. George, "Radio over fiber for picocellular network architectures," *J. Lightw. Technol.*, vol. 25, no. 11, pp. 3301–3320, 2007.

[68] M. Y. W. Chia, B. Luo, M. L. Yee, and E. J. Z. Hao, "Radio over multimode fibre transmission for wireless LAN using VCSELs," *Electron. Lett.*, vol. 39, no. 15, pp. 1143–1144, 2003.

[69] ***[Month?]***C. Carlsson, A. Larsson, and A. Alping, "RF transmission over multimode fibers using VCSELs—Comparing standard and high-bandwidth multimode fibers," *J. Lightw. Technol.*, vol. 22, no. 7, pp. 1694–1700, 2004.

[70] C. Lethien, C. Loyez, and J.-P. Vilcot, "Potentials of radio over multimode fiber systems for the in-buildings coverage of mobile and wireless LAN applications," *IEEE Photon. Technol. Lett.*, vol. 17, no. 12, pp. 2793–2795, 2005.

[71] A. Brizido, M. Lima, R. Nogueira, P. Andre, and A. Teixeira, "3G radio distribution based on directly modulated lasers over passive transparent optical networks," in *Proc. IMOC2007*, 2007, pp. 658–661.

[72] H. Le Bras and M. Moignard, "Distribution of 3G base stations on passive optical network architecture," in *Proc. Microw. Photon. (MWP)*, 2006, pp. 1–4.

[73] ***[Month?]***H. Kosek, Y. He, X. Gu, and X. N. Fernando, "All-optical demultiplexing of WLAN and cellular CDMA radio signals," *J. Lightw. Technol.*, vol. 25, no. 6, pp. 1401–1409, 2007.

[74] M. Chacinski, A. Djupsjobacka, U. Westergren, R. Schatz, P.-Y. Foniallaz, E. Tipsiwannakul, and E. Udvary, "400 km transmission of STM-16 data on baseband and DVBT on 40 GHz subcarrier," in *Proc. Int. Conf. Telecommun. (ICT)*, 2008, pp. 1–3.

[75] ***[Month?]***A. Martinez, V. Polo, and J. Marti, "Simultaneous baseband and RF optical modulation scheme for feeding wireless and wireline heterogeneous access networks," *IEEE Trans. Microw. Theory Tech.*, vol. 49, no. 10, pp. 2018–2024, 2001.

[76] ***[Month?]***K. Ikeda, T. Kuri, and K. Kitayama, "Simultaneous three-band modulation and fiber-optic transmission of 2.5-Gb/s baseband, microwave- and 60-GHz-band signals on a single wavelength," *J. Lightw. Technol.*, vol. 21, no. 12, pp. 3194–3202, 2003.

[77] ***[Month?]***Z. Jia, J. Yu, Y. Hsueh, A. Chowdhury, H. Chien, J. A. Buck, and G.-K. Chang, "Multiband signal generation and dispersion-tolerant transmission based on photonic frequency tripling technology for 60-GHz radio-over-fiber systems," *IEEE Photon. Technol. Lett.*, vol. 20, pp. 1470–1472, 2008.

[78] M. Bakaul, A. Nirmalathas, C. Lim, D. Novak, and R. Waterhouse, "Hybrid multiplexing towards the integration of millimetre-wave fiber-radio systems in DWDM access networks," in *Proc. LEOS 2005*, Sydney, Australia, 2005, pp. 577–578.

IEEE Proof
Web Version

[79] ***[Month?]*** C. Lim, A. Nirmalathas, M. Attygalle, D. Novak, and R. B. Waterhouse, "On the merging of millimeter-wave fiber-radio backbone with 25 GHz WDM ring networks," *J. Lightw. Technol.*, vol. 21, no. 10, pp. 2203–2210, 2003.

[80] ***[Month?]*** M. Bakaul, A. Nirmalathas, C. Lim, D. Novak, and R. Waterhouse, "Hybrid multiplexing of multiband optical access technologies towards an integrated DWDM network," *IEEE Photon. Technol. Lett.*, vol. 18, no. 21, pp. 2311–2313, 2006.

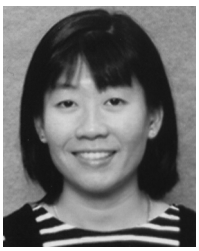

Christina Lim (S'98–M'00–SM'06) received the B.E. (first-class hons) and Ph.D. degrees in electrical and electronic engineering from the University of Melbourne, Australia, in 1995 and 2000, respectively.

In 1999, she joined the Photonics Research Laboratory (a member of the Australian Photonics Cooperative Research Centre) at the University of Melbourne. She is currently an Associate Professor and Principal Research Fellow with the ARC Special Research Centre for Ultra-Broadband Information Networks (CUBIN), Department of Electrical and Electronic Engineering, at the same university. Between 2003 and 2005, she was the Project Leader of the Australian Photonics CRC Fiber-to-the-Premises Challenge Project. In January 2007 and 2008, she was a Visiting Scholar at the Department of Electrical and Computer Engineering, University of California at San Diego. Her research interests include fiber-wireless access technology, modeling of optical and wireless communication systems, microwave photonics, application of mode-locked lasers, optical network architectures and optical signal monitoring. She has written more than 150 technical articles in these areas.

Dr. Lim was also one of the recipients of the 1999 IEEE Lasers and Electro-Optics Society (IEEE LEOS) Graduate Student Fellowship and a recipient of the Australian Research Council Australian Research Fellowship. She is currently a member of the Steering Committee for the Asia Pacific Microwave Photonics and IEEE Topical Meeting on Microwave Photonics Conference series.

Ampalavanapillai (Thas) Nirmalathas <MEMBERSHIP YEARS?> received the B.E and Ph.D. degrees in electrical and electronic engineering from the University of Melbourne, Australia, in 1993 and 1998, respectively.

He is currently a Professor in the Department of Electrical and Electronic Engineering at the University of Melbourne, Australia. He is also the Director of Melbourne Engineering Research Institute (MERIT) which brings the entire research activity of the Melbourne School of Engineering within one institute. Between 2000 and 2004, he was the Director of Photonics Research Laboratory (Melbourne Node of Australian Photonics CRC) and also the Program Leader of Telecommunications Technologies Program. From 2004 to 2006, he was the Program Leader for the Network Technologies Research Program in NICTA. He was also the acting Lab Director of VRL in 2007. Between 2006 and 2008, He was the Research Group Manager of the Networked Systems Group of Victoria Research Laboratory (VRL) at the National ICT Australia (NICTA), a premier Australian research centre of excellence in ICT. He has written more than 200 technical articles and currently hold 2 active international patents. His research interests include microwave photonics, semiconductor lasers, fiber-radio systems, optical access networks, optical performance monitoring and WDM packet switched networks.

Dr. Nirmalathas is currently the chair of steering committees of Asia Pacific Microwave Photonics and IEEE Topical Meeting on Microwave Photonics Conference series. He is also a member of the Steering Committee for the International Conference on Optical Internet (COIN). He was also Guest Editor for Special Issue on Opto-Electronics and Communications of the IEICE Transactions in Communications. He was the General Co-Chair of 2008 IEEE Topical Meeting on Microwave Photonics/Asia Pacific Microwave Photonics 2008. He is currently an Associate Editor of IEEE/OSA JOURNAL OF LIGHTWAVE TECHNOLOGY. He is a member of Optical Society of America and a Fellow of the Engineers Australia.

Masuduzzaman Bakaul <EDUCATIONAL BACKGROUND?>

Prior to joining the University of Melbourne, Dr. Bakaul was an optical engineer with Fiber Optic Network Solutions (FONS) Bangladesh LTD and worked there till 2001. Since his inception with the University of Melbourne, as a Ph.D. student in 2002, and as a researcher in 2006, he has authored or co-authored 46 refereed publications in these areas, including 14 journals, 7 invited papers, 23 conference contributing papers, 1 book chapter, and 1 provisional patent. Most of these papers were published in Tier 1 IEEE, OSA, IEE journals and conferences with the highest impact factors. He is a leading researcher and developer in several areas of photonics and microwave communications, such as radio-over-fibre, optical-wireless integration, OFDM-over-fibre towards 100 Gb/s Ethernet and beyond, and optical performance monitoring. He has contributed to NICTA's commercialization activities through his research resulting in a start-up company. He has also contributed to organisation of many international conferences. Currently he supervises two Ph.D. students and contributes to teaching of two postgraduate subjects.

Dr. Bakaul's paper in IEEE LEOS'2005 conference was awarded the LEOS/Newport/Spectra-Physics Research Excellence Award, which was featured in April 2006 issue of IEEE LEOS monthly newsletter.

Prasanna Gamage (S'05) received the B.Sc. degree in engineering (second class uppers hons), the M.Sc. degree in telecommunication engineering from the University of Moratuwa, Sri Lanka, and RMIT University, Australia, in 1996 and 2004, respectively. He receieved the Ph.D. degree in electrical and electronic engineering from the University of Melbourne, Melbourne, Australia in 2009.

He joined Sri Lanka Telecomm, where he worked from 1998 to 1999. He joined eB2B.com, Australia from 2000 till 2002. **<CURRENT POSITION?>**His research focuses on digitized RF transport optical link for future fiber radio systems.

K. L. (Alan) Lee received the B.E., M.Phil., and Ph.D. degree in electronic engineering from the Chinese University of Hong Kong, in 1998, 2000, and 2003 respectively. His Ph.D. study included experimental study of time and wavelength interleaved short pulse generation, photonic analog to digital converter and multicasting of digital signal. From January to April 2004, he joined the optoelectronic laboratory at the same university as a postdoctoral fellow and continued the research on photonic analogue to digital converter.

In May 2004, he moved to the University of Melbourne (UoM) as a Research Fellow, and has been working actively in the areas of high speed multiwavelength optical pulses generation for the application of ADC, multicasting of digital data, optical label processing, passive optical networks, and optical imaging. In July and August 2005, he was invited to work as a Guest Researcher at the National Institute of Information and Communications Technology (NICT), Japan and work on all-optical packet switch. In November 2006, he has been invited to work as a visiting research scholar at the McGill University and work on optical sources for the application in optical coherence tomography. He is currently a senior research fellow at the ARC Special Research Centre for Ultra-Broadband Information Networks (CUBIN), UoM. Recent years, he is developing new approaches for long-reach broadband access and radio-over-fiber. His research interest also includes optical packet switching, microwave photonic and optical signal processing.

IEEE Proof
Web Version

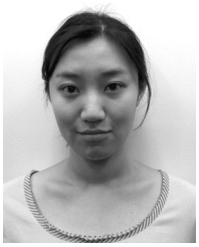

Yizhuo Yang received THE B.S. degree (first-class hons) in applied physics from BeiHang University, Beijing, China in 2007. She is currently working towards the Ph.D. degree in electrical and electronic engineering at the ARC Special Research Centre for Ultra-Broadband Information Networks (CUBIN) in the University of Melbourne, Australia.

Her research interests are in fiber-wireless networks, optical access networks, and microwave photonics.

Dalma Novak (S'90–M'91–SM'02–F'07) is a Vice President at Pharad, LLC who are developing advanced antenna and RF over fiber technologies. She received the degrees of B.Eng. degree (electrical) with (first-class hons) and the Ph.D. degree from the University of Queensland, Australia, in 1987 and 1992, respectively.

From 1992–2004 she was a faculty member in the Department of Electrical and Electronic Engineering at The University of Melbourne, Australia and during 2004–2009 was a Professorial Fellow in the same Department. From July 2000 to January 2001 Dr. Novak was a Visiting Researcher in the Department of Electrical Engineering at UCLA, and at the Naval Research Laboratory, Washington, DC. From June 2001–December 2003 she was a Technical Section Lead at Dorsál Networks, Inc. and later at Corvis Corporation. From January–June 2004 she was Professor and Chair of Telecommunications at The University of Melbourne. Dr. Novak's research interests include hybrid fiber radio systems, microwave photonics applications, high speed optical communication systems, wireless communications, and antenna technologies and she has published more than 250 papers in these and related areas, including six book chapters.

Dr. Novak is Chair of the IEEE Photonics Society Technical Committee on Microwave Photonics and the IEEE MTT Society Technical Committee on Microwave Photonics. From 2003–2007 she was an Associate Editor of the IEEE/OSA JOURNAL OF LIGHTWAVE TECHNOLOGY. She is Technical Program Chair for the 2010 IEEE Photonics Society Annual Meeting.

Rod Waterhouse received the B.Eng., M.S., and Ph.D. degrees in electrical engineering from the University of Queensland, Australia, in 1987, 1989 and 1994, respectively.

In 1994 he joined RMIT University as a lecturer, become a Senior Lecturer in 1997 and an Associate Professor in 2002. From 2001–2003, he was with the venture-backed Dorsal Networks which was later acquired by Corvis Corporation. In 2004 he co-founded Pharad, an antenna and wireless communications company, where he is now Vice President. From 2003–2008 he was appointed as a Senior Fellow within the Department of Electrical and Electronic Engineering at the University of Melbourne. His research interests include antennas, electromagnetics and microwave photonics engineering. He has over 260 publications in these fields, including 2 books and 4 book chapters.

Dr. Waterhouse is an Associate Editor for the IEEE TRANSACTIONS ON ANTENNAS AND PROPAGATIONS and he is also a member of the Editorial Board for IET Microwaves, Antennas and Propagation. He chaired the IEEE Victorian MTTS/APS Chapter from 1998–2001 and in 2000 received an IEEE Third Millennium Medal for Outstanding Achievements and Contributions.

IEEE Proof Web Version

Fiber-Wireless Networks and Subsystem Technologies

Christina Lim, *Senior Member, IEEE*, Ampalavanapillai Nirmalathas, *Senior Member, IEEE*, Masuduzzaman Bakaul, Prasanna Gamage, Ka-Lun Lee, *Member, IEEE*, Yizhuo Yang, Dalma Novak, *Fellow, IEEE*, and Rod Waterhouse, *Senior Member, IEEE*

***Abstract*—Hybrid fiber-wireless networks incorporating WDM technology for fixed wireless access operating in the sub-millimeter-wave and millimeter-wave (mm-wave) frequency regions are being actively pursued to provide untethered connectivity for ultrahigh bandwidth communications. The architecture of such radio networks requires a large number of antenna base-stations with high throughput to be deployed to maximize the geographical coverage with the main switching and routing functionalities located in a centralized location. The transportation of mm-wave wireless signals within the hybrid network is subject to several impairments including low opto-electronic conversion efficiency, fiber chromatic dispersion and also degradation due to nonlinearities along the link. One of the major technical challenges in implementing such networks lies in the mitigation of these various optical impairments that the wireless signals experience within the hybrid network. In this paper, we present an overview of different techniques to optically transport mm-wave wireless signals and to overcome impairments associated with the transport of the wireless signals. We also review the different designs of subsystems for integrating fiber-wireless technology onto existing optical infrastructure.**

***Index Terms*—Fiber-wireless, microwave photonics, optical-wireless integration, radio-over-fiber.**

I. Introduction

THE explosive growth of global mobile and wireless access technology in recent years has been fuelled by the maturing and more reliable digital and RF circuit fabrication and miniaturization technologies for producing smaller portable wireless devices [1]. It is envisaged that the growth of the mobile and wireless community will continue at an even greater pace in the next decade. Currently available wireless services and standards such as Wi-Fi, GSM, UMTS are concentrated in the lower microwave band. New emerging wireless standards such as WiMAX and LTE will further enhance existing wireless transmission speeds and throughputs; however, they still operate within the lower microwave regions (2–4 GHz). This places a heavy burden on the already congested wireless spectrum in the microwave region. This is also the fundamental driver that has led to new wireless technologies which can exploit the large unused bandwidths of sub-millimeter or millimeter-wave (mm-wave) frequency regions for the provision of future broadband wireless services. One particular band of interest is the unlicensed 60 GHz frequency band (57–64 GHz) which is targeted towards short range in-building high-speed applications, has gained significant popularity in the last few years [2]. With the inherent high propagation loss characteristics of wireless signals at these frequencies, pico- or microcellular architectures are essential to provide efficient geographical coverage which necessitates a large deployment of antenna base-stations (BSs). With the dramatic increase of the throughput of each BS in such systems, the use of an optical fiber backbone is required to provide broadband interconnections between the central office (CO) and all the antenna BSs. This leads to the integration of the optical and wireless broadband infrastructures via a common backhaul network that in turn offers significant advantages while supporting both wired and wireless connectivity. In this hybrid network layout, significant reduction of the antenna BS complexity can be achieved by moving the routing, switching and processing functionalities to the CO. This strategy also enables the cost and equipment to be shared among all the antenna BSs.

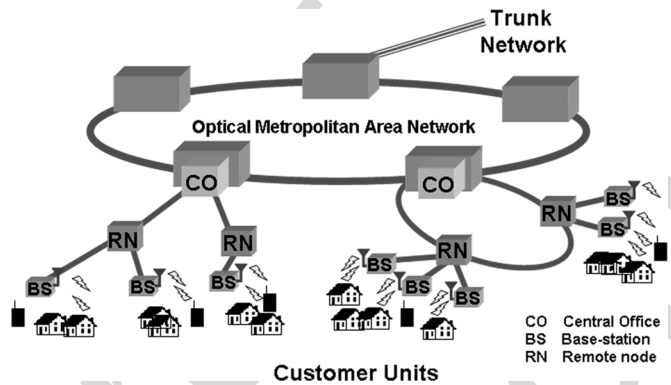

Fig. 1. Millimeter-wave fiber-wireless network.

Although the optical-wireless integration is able to simplify the backhaul infrastructure and offers significant benefits to future service providers, the implementation of the hybrid fiber-wireless network is not straightforward and issues regarding wireless signal transport, signal impairments, spectrum allocation, performance optimization and integration with existing infrastructure have to be considered. This paper will provide an

Manuscript received May 07, 2009; revised August 19, 2009. This work was supported in part by the Australian Research Council Discovery Project Grant DP0452223.

C. Lim, A. (Thas) Nirmalathas, P. Gamage, K.-L. Lee, and Y. Yang are with the ARC Special Research Centre on Ultra Broadband Information Networks (CUBIN), Department of Electrical and Electronic Engineering, The University of Melbourne, VIC 3010, Australia (e-mail: c.lim@ee.unimelb.edu.au).

M. Bakaul is with the National ICT Australia, Victoria Research Laboratory, Department of Electrical and Electronic Engineering, The University of Melbourne, VIC 3010, Australia (e-mail: m.bakaul@ee.unimelb.edu.au).

D. Novak and R. Waterhouse are with Pharad, LLC, Glen Burnie, MD 21061 USA (e-mail: dnovak@pharad.com; rwaterhouse@pharad.com).

Digital Object Identifier 10.1109/JLT.2009.2031423

0733-8724/$26.00 © 2009 IEEE

IEEE Proof Print Version

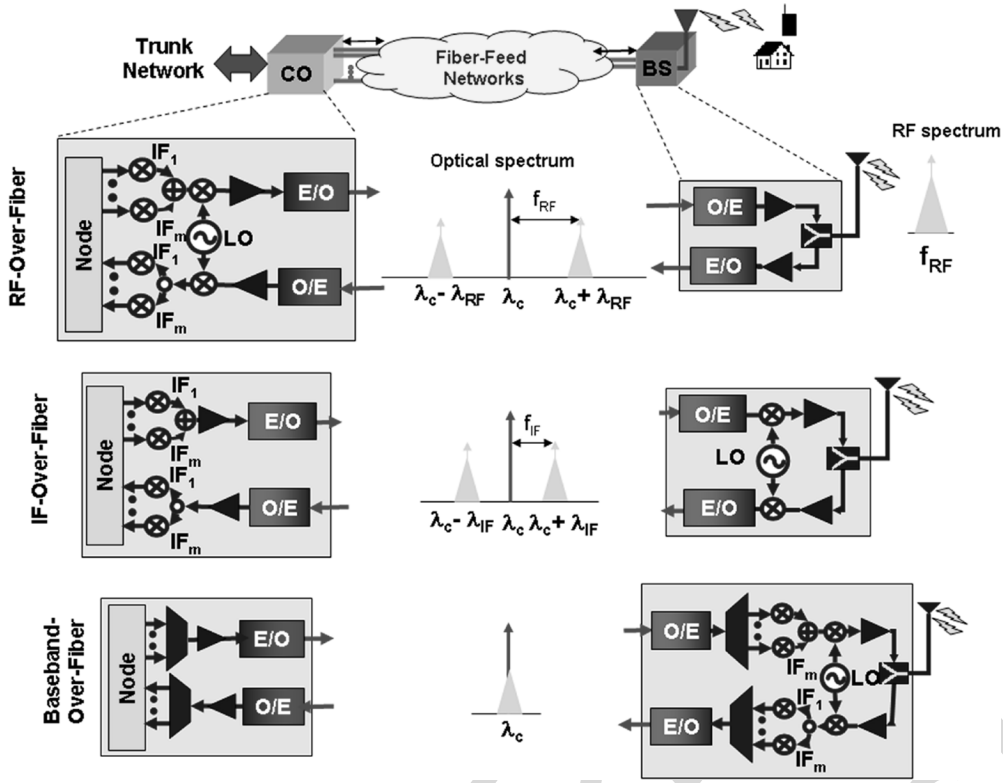

Fig. 2. Wireless signal transport schemes: (a) RF-over-fiber, (b) IF-over-fiber, (c) Baseband-over-fiber.

overview of the progress made in the last two decades in fiber-wireless technology focusing on the various schemes and strategies to tackle the key challenges.

This paper is organized as follows: Section II describes the various optical transport schemes for wireless signals and Section III investigates the impairments the wireless signals experience while propagating over the optical link and the corresponding strategies to overcome these impairments. Section IV focuses on the subsystem and interface designs for WDM-based mm-wave fiber-wireless networks while Section V provides an overview of fiber-wireless application in a heterogeneous access network. Finally, conclusions are presented in Section VI.

II. Optical Transport Schemes for Wireless Signals

Millimeter-wave (mm-wave) fiber-wireless systems have the advantage of being able to exploit the large unused bandwidth in the wireless spectrum as well as the inherent large bandwidth of the optical fiber. Such a hybrid architecture can potentially provide high data rates and throughput with minimal time delay. The generic architecture of a mm-wave fiber-wireless architecture is shown in Fig. 1. The conceptual infrastructure comprises a CO which is connected to a large number of antenna BSs via an optical fiber network. Much research has been carried out on the development and exploitation of optically-fed mm-wave wireless technologies with earlier work focusing on fiber link configurations for wireless signal distributions [3]–[6]. In general, there are three possible methods to transport the mm-wave wireless signals over the optical link as shown graphically in Fig. 2: RF-over-fiber, IF-over-fiber, and Baseband-over-fiber. The choice of the optical transport scheme will also determine the hardware requirements in the CO and antenna BS.

A. RF-Over-Fiber

The simplest scheme for transporting mm-wave wireless signals via an optical fiber feed network is to directly transport the mm-wave wireless signals over fiber (RF-over-fiber) without any need for frequency translation at the remote BS as shown in Fig. 2. In this configuration, the mm-wave wireless signal is externally modulated onto the optical carrier resulting in an optical double sideband (ODSB) signal as illustrated in Fig. 2. The two sidebands are located at the wireless carrier frequency away from the optical carrier. Upon detection at the BS, the mm-wave wireless signal can be recovered via direct detection using a high-speed photodetector. RF-over-fiber transport has the advantage of realizing simple base-station designs with additional benefits of centralized control, independence of the air-interface and also enabling multiwireless band operation. However one of its major drawbacks is the requirement for high-speed optical modulation techniques that have the ability to generate mm-wave modulated optical signals and also high-speed photodetection schemes that directly convert the modulated optical signals back to mm-wave signals in the RF domain. Another key issue is the significant effect of fiber chromatic dispersion on the detected mm-wave wireless signals [7]–[9].

B. IF-Over-Fiber

In contrast to the transmission of mm-wave wireless signals over fiber, the wireless signals can be downconverted to a lower

IEEE Proof Print Version

intermediate frequency (IF) at the CO before optical transmission. The effects of fiber chromatic dispersion on the optical distribution of IF signals are reduced significantly. In addition, IF-over-fiber transport scheme has the advantage of using low-speed optoelectronic devices. The complexity of the antenna BS hardware however, increases with IF signal transport for mm-wave wireless access systems. It will now require a stable mm-wave local oscillator (LO) and high-speed mixers for the frequency translation processes in the BS as illustrated in Fig. 2. This may also present a limitation when considering the ability to upgrade or reconfigure the wireless network for the inclusion of additional mm-wave wireless channels or alterations to the wireless frequency. The subsequent requirement for a mm-wave LO at the antenna BS can be overcome by remotely delivering the LO signal optically from the CO [10]. This also enables centralized control of the LO signals themselves.

C. Baseband-Over-Fiber

As shown in Fig. 2, the third transport scheme transports the wireless signal as a baseband signal over fiber, and then upconverts the information to the required mm-wave radio frequency at the antenna BS. This scheme has the advantage of using mature digital and electronic circuitry for signal processing at the BS. In addition, it also enables low-speed optoelectronic devices to be used within the BS. As with IF-over-fiber, the effects of fiber chromatic dispersion are also greatly reduced. Furthermore remote delivery of a mm-wave LO signal from the CO can overcome the need of a physical LO in the BS. This transport scheme is dependent on the air-interface which means that the BS must have the intelligence to thoroughly process the wireless signals before sending the baseband information back to the CO. Hence, it necessitates the housing of additional hardware within the BS to perform these tasks which increases the complexity of the BS drastically. With the recent advancements in CMOS technology, high-frequency radio-on-chip has been demonstrated [11], [12]. Also, the emergence of silicon photonic technology may enable the future low-cost integration of optoelectronic and electronic devices in order to achieve a cost-effective, compact transceiver module within the antenna BS [13].

D. Discussion

Comparing the three transport schemes, ultimately there is a trade-off between the complexity in the RF electronic and the optoelectronic interfaces within the base-station. One of the key challenges in implementing mm-wave fiber-wireless access systems is to efficiently distribute the wireless signals while maintaining a functionally simple and compact BS design. Amongst the schemes, RF-over-fiber transport scheme has the potential to simplify the BS design for mm-wave fiber-wireless systems. Having said this, the signals are susceptible to a number of impairments along the link that may degrade the overall system performance. This will be discussed in the next section.

III. Optical Impairments and Strategies to Overcome Impairments in mm-Wave Fiber-Wireless Links

Fig. 3 illustrates the various impairments that the optically modulated mm-wave signal experiences as it propagates along the optical fiber. Within a simple point-to-point link connecting an antenna BS and a CO, the received mm-wave wireless signals must undergo electrical-to-optical (E/O) conversion typically via external modulation using an electro-optic modulator in conjunction with an optical carrier. Due to the nonlinear characteristics of the modulator, the mm-wave wireless signals are typically weakly modulated onto the optical carrier, resulting in a very low modulation efficiency. In addition the external modulator nonlinear characteristics generate intermodulation products which contribute to the overall signal degradation. Once the mm-wave radio signals are modulated onto the optical carrier, the optical signal will be transported over the optical fiber link to the central office. The optical distribution of the mm-wave radio signals is subjected to the effects of fiber chromatic dispersion that will severely limit the overall transmission distance [8], [9]. In addition, the optical spectral usage for the distribution of the mm-wave radio signal is highly inefficient, considering that the amount of useful information that is being transported (<3 Gb/s) is only a fraction of the occupied spectrum (>40 GHz). In a long-reach scenario, the optical signal may experience signal degradation due to fiber nonlinearities if the optical signal power is optically amplified to overcome link losses and the amplified optical power is large enough to trigger fiber nonlinearity effects. Another impairment that the signals may experience in a long-reach environment is phase decorrelation between the optical carrier and the wireless signals which may introduce an addition penalty [14]. Upon reception at the receiver, the optical signal undergoes an optical-to-electrical (O/E) conversion in a photodiode. The photodiode is also a non-linear device and is governed by the square-law process. The detection process will further introduce distortions into the system. Therefore, it is of great importance that these various impairments that the signals experience along the link be mitigated to improve the signal quality and the overall performance of the mm-wave hybrid fiber-wireless link. In this section, we review the different mitigation strategies and techniques to overcome some of the impairments.

A. Impact of Fiber Chromatic Dispersion on Optically Modulated Millimeter-Wave Signals

When the mm-wave wireless signals are intensity modulated onto an optical carrier, it will result in a double-sideband-with-carrier (ODSB) modulation format where the sidebands are located at the mm-wave frequency on either side of the optical carrier. Hence, when the mm-wave modulated optical signal propagates along a dispersive fiber, the two sidebands will experience different amount of phase shift relative to the optical carrier. Upon detection at the photodetector, the square-law process generates two beat components at the desired mm-wave frequency. The received RF power of the mm-wave signal varies depending on the relative phase difference between the two beat components. The RF power variation is dependent on the fiber dispersion parameter, the transmission distance and also the mm-wave frequency as governed by the following equation [8]:

$$P_{\mathrm{RF}} \propto \cos^2\left(\pi c L D \left(\frac{f_{\mathrm{mm}}}{f_0}\right)^2\right) \tag{1}$$

IEEE Proof Print Version

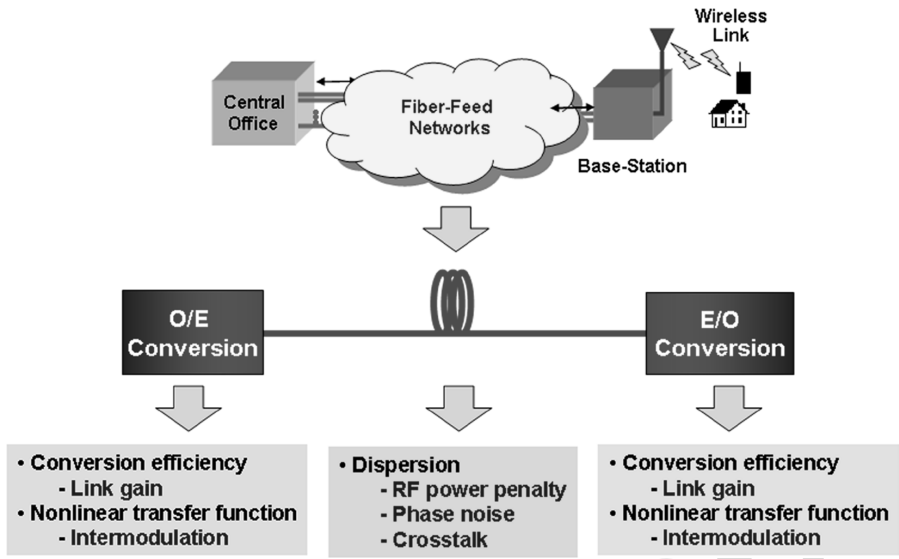

Fig. 3. Optical impairments in mm-wave fiber-wireless links.

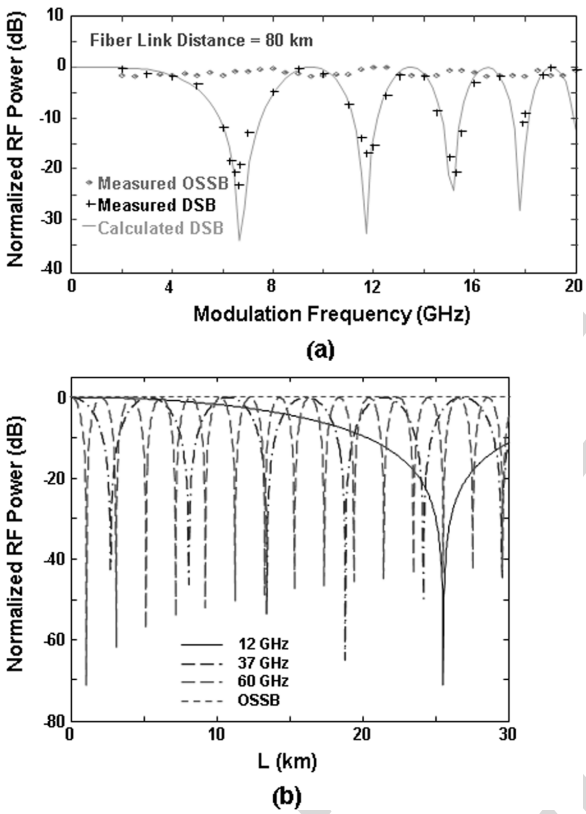

Fig. 4. (a) Measured and calculated normalized received RF power for ODSB and $\mathrm{OTSSB+C}$ modulation as a function of modulation frequency for $\mathrm{L} = 80$ km (b) as a function of fiber transmission length for modulation frequencies at 12 GHz, 37 GHz and 60 GHz.

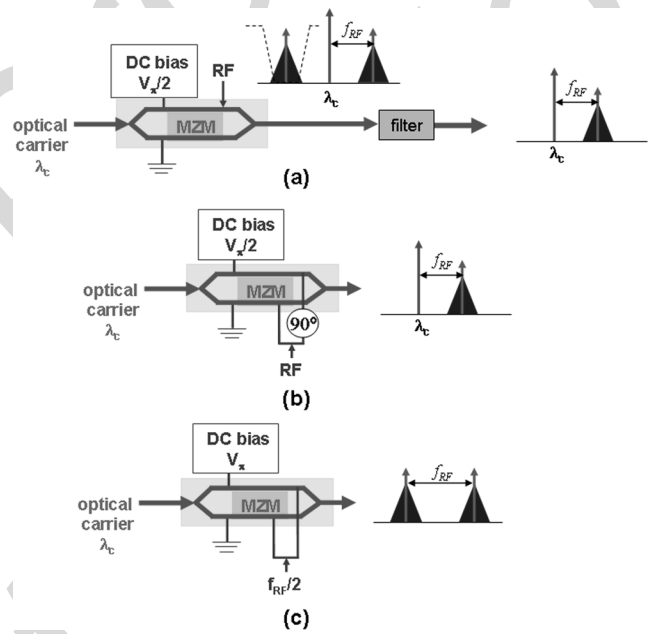

Fig. 5. (a) $\mathrm{OSSB+C}$ signal generation using narrowband filter, (b) $\mathrm{OSSB+C}$ signal generation using DEMZM, (c) Optical carrier suppression signal generation.

where D represents the fiber dispersion parameter in ps/nm/km, c is the velocity of light in a vacuum, L is the fiber transmission length, f_{mm} represents the mm-wave modulating frequency and f_0 is the optical carrier center frequency. To quantify the severity of the penalty, shown in Fig. 4(a) is the measured and calculated normalized received RF power using (1) as a function of modulating frequency for transmission over 80 km of single-mode fiber. Normalized RF power is defined as the ratio of detected RF power at 80 km of fiber to the RF power calculated at 0 km of fiber. From the results it can be seen that the RF power varies in a periodic manner with complete power suppression occurring at specific modulating frequencies [8]. Fig. 4(b) shows the received normalized RF power plotted as a function of fiber transmission distance (L) for ODSB signals with modulating frequencies of 12 GHz, 37 GHz and 60 GHz, respectively. It can be seen that the impact of fiber chromatic dispersion becomes more pronounce with increasing modulating frequency.

Since the fiber-induced dispersion penalties are so severe in direct-detection optically-fed mm-wave systems, various techniques have been proposed and demonstrated to overcome

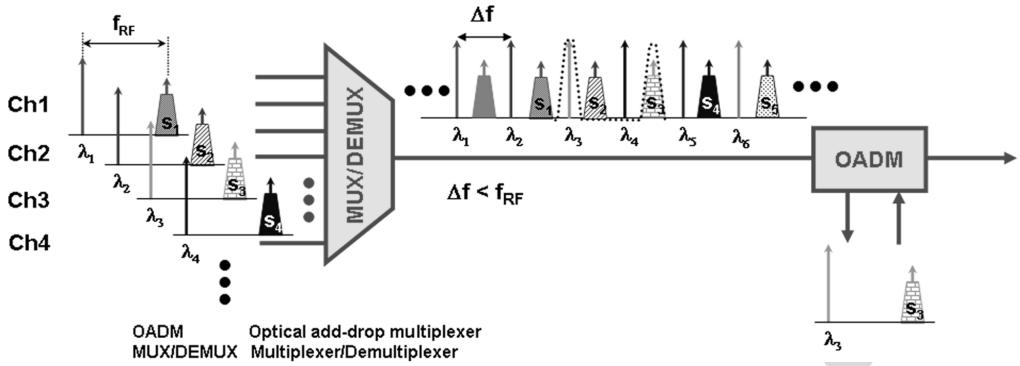

Fig. 6. Schematic showing wavelength interleaving scheme for $\mathrm{OSSB+C}$ signals.

dispersion effects in such systems. Amongst these techniques are the optical-single-sideband-with-carrier ($\mathrm{OSSB+C}$) modulation scheme [15], optical carrier suppression technique [16]–[18], external filtering [19]–[22], using chirped fiber gratings [23], using fiber nonlinearities [24]–[26], and using phase conjugation [27]. A convenient technique to overcome the fiber dispersion effect is by simply removing one of the optical sidebands in an optical DSB modulated signal. This can be done via optical filtering using a narrowband notch fiber Bragg grating where the reflective band coincides with the unwanted sideband [19] as illustrated in Fig. 5(a). While this technique is simple to implement, the limited flexibility makes the implementation difficult to accommodate for modifying the mm-wave frequency.

Another technique to overcome the impact of fiber chromatic dispersion on mm-wave modulated optical signals is by using the $\mathrm{OSSB+C}$ modulation format. The $\mathrm{OSSB+C}$ formatted signal can be generated via cancellation of the unwanted optical sideband within an external optical modulator. This can be done using a dual-electrode Mach–Zehnder modulator (DEMZM) biased at quadrature and with the RF signal applied to both electrodes with a 90° phase shift between the two electrodes [15] as illustrated in Fig. 5(b). The interaction between the RF modulation and the optical signals results in the suppression of one of the odd-harmonics modulation sidebands. Both the optical filtering and $\mathrm{OSSB+C}$ techniques suffer a 6 dB electrical loss since half of the optical sideband power is removed in comparison to the optical double sideband case. Also shown in Figs. 4(a) and (b) are the measured and calculated normalized received RF power for $\mathrm{OSSB+C}$ which clearly indicates that it is able to overcome the dispersion-induced RF power penalty.

The optical carrier suppression scheme is another effective method to combat dispersion effects in mm-wave fiber-wireless links [16]–[18]. By biasing a single-electrode Mach–Zehnder modulator (MZM) at the minimum transmission point of the transfer function, the optical carrier will be suppressed to generate a double-sideband-suppressed-carrier optical signal as shown in Fig. 5(c). Such an implementation requires only half the desired modulating frequency to drive the MZM. The mixing of the two optical carriers at a high-speed photodetector generates a single beat component at twice the drive frequency which is not affected by dispersion-induced RF power penalties. Despite this simple, elegant approach, this technique requires a large RF drive power to obtain a desirable modulation depth since the modulator is biased in the nonlinear region.

B. Optical Spectral Efficiency for Transporting Optically Modulated Millimeter-Wave Signals

It is important to note that despite the large wireless carrier frequency, the wireless information bandwidth is typically only occupying a small fraction of the bandwidth relative to the carrier frequency. Hence, to transport a mm-wave wireless signal in an ODSB signal format where the wireless sidebands are located on either side of the optical carrier inherently leads to inefficient use of optical bandwidth. On the other hand, the $\mathrm{OSSB+C}$ modulation scheme not only overcomes the fiber chromatic dispersion issue, it also improves the optical spectral usage by at least 50% compared to the ODSB case. Nevertheless the transportation of $\mathrm{OSSB+C}$ modulated radio signals at mm-wave frequencies still leads to the inefficient use of the optical spectrum especially in a wavelength-division-multiplexed (WDM) environment where the actual information bandwidth of the radio signals modulated onto an optical WDM channel (typically at 50 or 100 GHz spacing) is <2 GHz. This also applies to the optical carrier suppression method. Therefore, the optical transport of mm-wave modulated optical signals leads to the inefficient use of the optical bandwidth. Recently there have been a number of proposed schemes to improve the optical spectral usage for the transportation of optically modulated mm-wave signals [28], [29]. These techniques are based on interleaving multiple mm-wave optical signals, making use of the unused spectral band between the optical carrier and sideband in an $\mathrm{OSSB+C}$ signal and that between the two sidebands in the optical carrier suppression technique as illustrated in Fig. 6. In principle, wavelength interleaving is able to enhance the overall capacity within the standard 1550 nm Erbium-doped fiber amplifier (EDFA) gain window by a factor of 3 for a 37.5 GHz fiber-wireless link incorporating $\mathrm{OSSB+C}$ [30].

Table I summarizes the unique advantages and disadvantages of different optical modulation schemes for transporting mm-wave wireless signals.

C. Optical Modulation Depth for Optically Modulated Millimeter-Wave Signals

Another issue related to mm-wave fiber-wireless signals is the weak modulation of the wireless signals. The mm-wave wire-

IEEE Proof Print Version

TABLE I
ADVANTAGES AND DISADVANTAGES OF DIFFERENT MODULATION SCHEMES

Optical mm-wave modulation schemes	Advantages	Disadvantages
Intensity modulation (Optical double sideband)	• Simple to generate	• Performance limited by dispersion-induced RF power penalty • Spectrally not efficient
Optical single sideband with carrier (OSSB+C) format	• Overcome dispersion-induced RF power fading • Minimal bit-walkoff impact • Improves spectral efficiency by 50% compared to ODSB	• Low receiver sensitivity • Performance may be limited by phase decorrelation in a long-reach environment
Optical carrier suppression technique	• Overcomes dispersion-induced RF power fading • Uses half the required LO frequency • Improves spectral efficiency by 50% compared to ODSB	• Suffers from bit-walkoff for longer transmission distance • Requires large RF drive power

less signal is typically weakly modulated onto the optical carrier due to the narrow linear region of intensity modulators. Consequently the power of the optically modulated mm-wave sideband can be more than 20 dB below that of the optical carrier for an $\mathrm{OSSB+C}$ signal. To improve the link performance, the optical power of the signals can be increased by using a high power optical source or an optical amplifier; however, this may lead to increased intermodulation distortions at the receiver or even damage of the receiver due to a too large optical power incident on the optical detector [31]. A few techniques have been proposed to improve the modulation efficiency of these signals including Brillouin scattering [31], [32], external optical filtering [33], [34], and optical attenuation [35].

In principle, an optical carrier suppression signal has better receiver sensitivity compared to an $\mathrm{OSSB+C}$ signal. Shown in Fig. 7 is a technique to improve the modulation efficiency of $\mathrm{OSSB+C}$ signals using an optical filtering scheme. Here a narrowband external fiber Bragg grating (FBG) is used to remove a portion of the optical carrier, leaving only a fraction of the optical carrier power to be detected at the receiver [36]. In this particular investigation, a number of FBGs with 3 dB reflection bandwidths of 2.7 GHz and reflectivity ranging from 3 dB (50%) to 30 dB (99.9%) were used to quantify the optical link performance as a function of modulation efficiency. Fig. 8(a) shows the measured optical spectrum of an $\mathrm{OSSB+C}$ signal carrying 155 Mb/s data at 35 GHz, before and after the FBG with 95% reflectivity that clearly indicates that the optical carrier was suppressed by 14 dB. The corresponding bit-error-rate (BER)

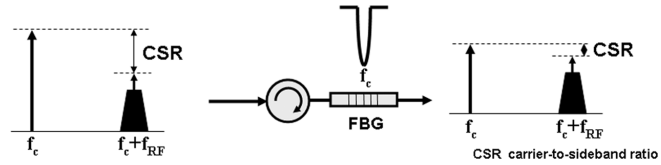

Fig. 7. Technique to improve modulation efficiency of $\mathrm{OSSB+C}$ signal using an FBG.

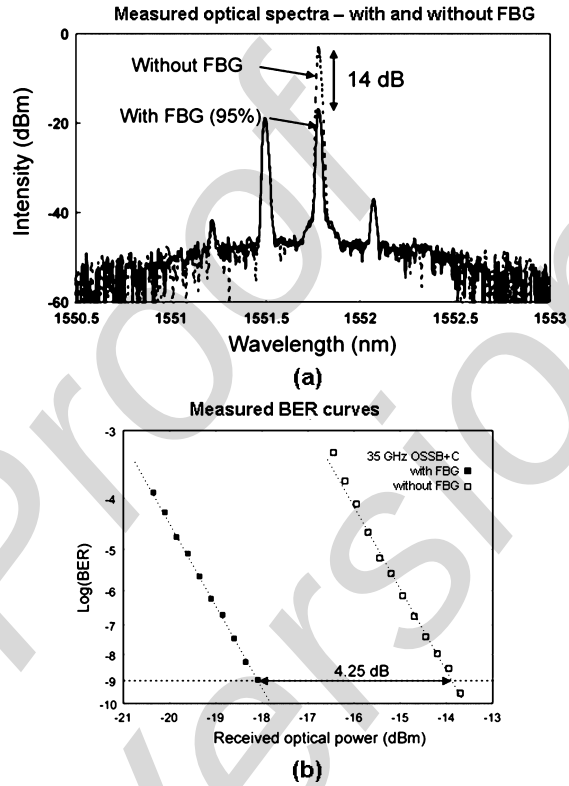

Fig. 8. Measured (a) optical spectra and (b) BER using 95% reflectivity FBG.

curves are shown in Fig. 8(b) with a 4.25 dB improvement in the sensitivity at a $\mathrm{BER} = 10^{-9}$ with the carrier-to-sideband ratio (CSR) decreased by 14 dB [37]. Hence, by reducing the CSR of the $\mathrm{OSSB+C}$ signal, the overall sensitivity of the link can be drastically improved. Studies have shown that the optimum CSR occurs at 0 dB [38]. The situation that an optimum CSR exists for a mm-wave modulated optical signal is due to the interplay between the optical powers in the carrier and sideband. The sensitivity of the link is dependent on the addition of these two parameters, while the BER is dependent on the square root of the product [38]. Therefore, by varying the CSR while maintaining a constant received optical power, the received data current peaks at a $\mathrm{CSR} = 0$ dB which leads to a lower BER and an improved performance. It is important to note here that this technique is envisaged for fiber-wireless networks with passive links. The improvement in receiver sensitivity can be translated to extended optical transmission distance.

D. Base-Station Technologies

To support full-duplex operation in mm-wave fiber-wireless networks, the optical interfaces within the antenna base station have to include optical sources which can be modulated by the

IEEE Proof
Print Version

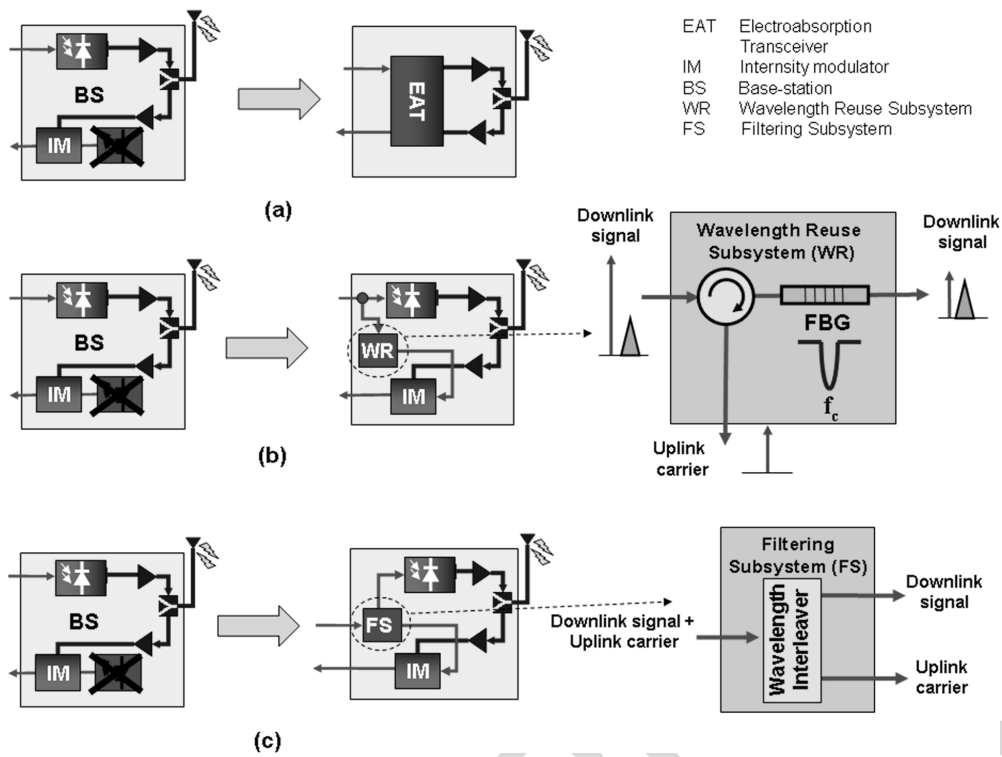

Fig. 9. Laser-free base-station using. (a) electroabsorption transceiver (EAT), (b) wavelength re-use scheme, (c) remote carrier delivery.

mm-wave uplink wireless signals. In addition, optical sources with narrow linewidths at well-specified wavelengths are required at the base stations to minimize phase noise degradation. However this scenario is not an attractive option for uplink signal transmission as ultra-stable, low-cost, narrow linewidth optical sources are difficult to realize. Therefore, there is a significant advantage to completely remove the need for an optical source in the antenna BS. Removing the optical source from the antenna BS also migrates the wavelength assignment and source monitoring functionalities to the CO which further relaxes the stringent requirements on the antenna BS hardware.

The first demonstration of a source-free antenna BS was British Telecom's passive pico cell concept [39] where an electro-absorption modulator (EAM) was used as both the detector and modulator by careful choice of the biasing condition [39]. In this technique, the EAM was optimized independently for two different optical signals to be used as the downlink and uplink carriers. This scheme was further improved and optimized for 60 GHz transmission where the EAM was termed as an electroabsorption transceiver (EAT) [40] as illustrated in Fig. 9(a). Here the EAT replaces the photodetector and uplink modulation where it acts as a photodetector for the downlink signals and as a modulator for the uplink wireless signals. In this scheme, the uplink carrier is remotely delivered from the CO.

Another source-free scheme that has been proposed and demonstrated is called the 'wavelength re-use' technique where a portion of the downlink carrier is extracted and re-used for uplink transmission [41]. Shown in Fig. 9(b) is the schematic of the wavelength re-use technique for $\mathrm{OSSB}+\mathrm{C}$ modulated signals where an optical carrier recovery interface is located within the BS. The optical carrier recovery interface consisting of a 3-port circulator and a narrowband FBG with 50% reflectivity is shown in Fig. 9(b). The incoming downlink $\mathrm{OSSB}+\mathrm{C}$ signal enters the optical carrier recovery interface via port 1 of the circulator where 50% of the optical carrier power is reflected by a FBG with a center wavelength at the optical carrier, which is located at the output of port 2. The remaining 50% of the carrier and the corresponding sideband feed a photodetector and the detected downlink signal enters the base station downlink RF interface for wireless transmission. The reflected optical carrier exits the optical interface via port 3 where it will be reused as the uplink optical carrier. The knowledge of the operating wavelength is sufficient for the design of the FBG making it more flexible in terms of frequency assignment at the base station-air interface.

A more convenient method to establish a source-free BS is to provide the uplink optical carrier remotely from the CO [42], [43]. This scheme is illustrated in Fig. 9(c). The optical source in the BS is replaced by a filtering subsystem that may consist of a wavelength interleaver or narrowband optical fiber. In this case, the uplink carrier is remotely delivered from the CO and the filtering subsystem functions to separate the uplink carrier from the downlink signals. The upstream wireless signals are modulated onto the optical carrier using an external modulator.

E. Optical Frontend Nonlinearity in Millimeter-Wave Fiber-Wireless Links

Another key challenge in implementing mm-wave fiber-wireless systems is the nonlinearity of the optical frontend. It is well-established that in a wireless access network with a multicarrier environment, linearity plays an important role in the achievable

IEEE Proof Version

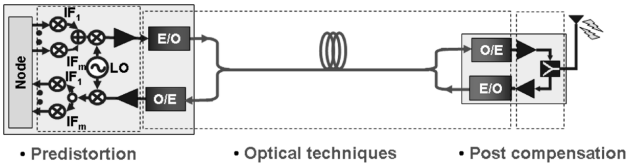

Fig. 10. Different categories of linearization techniques.

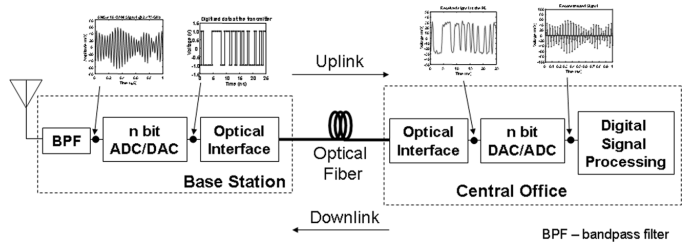

Fig. 11. Schematic of fiber-wireless link deploying digitized RF transport.

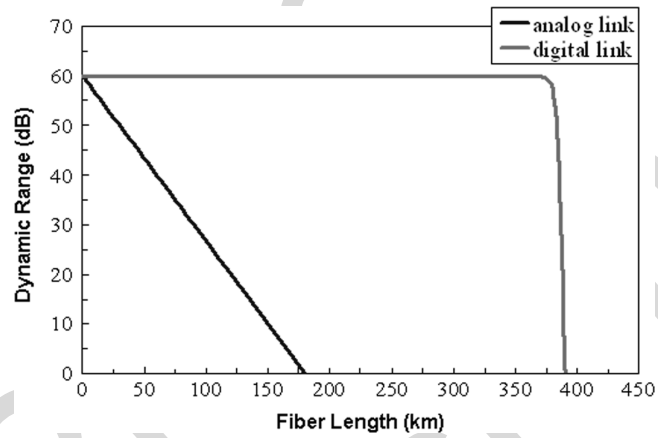

Fig. 12. Dynamic range of fiber-wireless link incorporating analog and digitized RF transport.

system dynamic range. It has been shown that the nonlinearity of the optical frontend in a fiber distributed wireless network limits the overall system dynamic range [44] and this condition worsens due to other fiber nonlinearities as the radio signals propagate through the fiber link [45]. The issue of linearity in fiber-wireless links has been widely investigated. A number of linearization techniques have been demonstrated to combat intermodulation distortion (IMD) products and improve the dynamic range of optical analog links including: optical feedforward [46], [47], gain modulation [48], predistortion [49], [50] and parallel modulator configurations [51]–[53]. These techniques can be generalized into three categories as summarized in Fig. 10, namely predistortion, post-compensation and optical techniques. Predistortion schemes focus on the mitigation of IMD within the frontend. In general the predistortion technique requires a pre-distorter at the source that combats IMD by generating frequency components of the same amplitude but opposite in phase. IMD mitigation using optical techniques includes optical feedforward [46], [47] and an efficient modulator configuration [51]–[53]. The optical feedforward technique has been shown to be effective in suppressing third-order IMD and also reduces the laser relative intensity noise (RIN) over a wide bandwidth [54]. This technique consists of two sections with one determining the error and the other canceling the error [46], [47]. Therefore, it relies on the careful tuning of the amplitudes and phases of the signals to ensure perfect cancellation. Post-compensation on the other hand, focuses on the receiver end and uses estimation and equalization to mitigate IMD via signal processing [55], [56].

Recently an alternative technique has been reported which is based on the transmission of digitized RF signals [57], [58] which benefits from the higher performance of digital optical links. Given that most of the wireless applications use signal bandwidths which are a small fraction of their carrier frequencies, bandpass sampling is an attractive scheme to digitize the wireless signals effectively. Bandpass sampling has the advantage of using a much lower sampling rate which is comparable to the wireless information bandwidth rather than the wireless carrier frequency [59].

Fig. 11 illustrates an optical link based on digital radio-over-fiber (DRoF) transport. The digitization of the wireless signal produces a sampled digital datastream in a serial format that can directly modulate an optical source. This approach enables the use of digital photonic links to transport the wireless signals. In this implementation, only a minimal set of frontend components (i.e., analog-to-digital converter (ADC) and digital-to-analog converter (DAC)) are needed in the antenna BS leaving all signal processing functions to be located in the CO. Given that the IMDs arising from nonlinear electrical-to-optical conversions and issues arising from using analog photonic links can now be completely avoided, an optical link employing digitized RoF transmission can maintain its dynamic range independent of the fiber transmission distance until when the received signal goes below the link sensitivity. Fig. 12 shows the calculated dynamic range of the system as a function of optical transmission distance for both DRoF and analog RoF links. Dynamic range presented here can be interpreted as the ratio of strongest signal to the weakest signal that can be supported without distortion. It can be clearly seen that the dynamic range in the analog link decreases steadily with fiber transmission length while DRoF is able to maintain a constant dynamic range until the transmission distance reaches a certain length. The sharp roll-off observed in Fig. 12 is due to synchronization loss. It is evident that the digitized RF transport offers a distinct advantage over an analog link for RoF signal transport, although the implementation of the DRoF scheme relies heavily on the ADC/DAC technology. Although bandpass sampling enables the use of a lower sampling frequency, the ADC requires the analog bandwidth to be at least equivalent to the wireless carrier frequency. Therefore, for mm-wave fiber-wireless systems, this scheme is still limited by commercially available ADC/DAC technology [60].

IV. Optical Subsystems Interface for WDM-Based Millimeter-Wave Fiber-Wireless Systems

It is well-established that the total capacity and throughput of a mm-wave fiber-wireless system can be greatly enhanced with efficient optical fiber architectures using wavelength-division-multiplexing (WDM) optical networking technology. Much research has been carried out in fiber-wireless networks incorporating WDM with the aim of reusing existing optical infrastruc-

IEEE Proof

ture. With the incorporation of WDM in mm-wave fiber-wireless approaches, a fast deployment route for these systems may be achieved. By leveraging the optical network infrastructure already existing in the access and metro network domains, unused fibers may be utilized as the means of communications between the CO and the antenna BSs. It is therefore equally important that mm-wave fiber-wireless access technology can coexist with other optical access technologies; being able to merge/integrate within the existing infrastructure and ensure transparency in the remote access nodes. As established in the previous section, the transportation of wavelength-interleaved mm-wave wireless signals in $\mathrm{OSSB} + \mathrm{C}$ and optical carrier suppression formats mitigate the impact of fiber dispersion induced power penalty and also improve the optical spectral usage. In this section, we will provide a review of various optical subsystem and interface designs to enable the seamless integration of WDM based fiber-wireless networks with existing WDM infrastructures.

A. Optical-Add-Drop-Multiplexer for Wavelength-Interleaved Dense-WDM Fiber-Wireless System

Fig. 13 shows a schematic of a WDM fiber-wireless architecture with a primary ring and incorporating both wavelength-interleaving and $\mathrm{OSSB} + \mathrm{C}$ modulation schemes. In such a configuration, an optical interface capable of dropping and adding the dense-WDM wavelength-interleaved (WI) channels is essential at the antenna BS [61]. One recent demonstration of such a multifunctional BS optical interface that supports optical adding and dropping of wavelength-interleaved-dense-WDM (WI-DWDM) channels from the main trunk, while removing the need for an optical source within the BS [61] has been shown. Fig. 14 shows the optical interface based on a 7-port optical circulator in conjunction with a double notch and a single notch fiber Bragg grating. The interface consists of 'IN', 'OUT', 'DOWNLINK DROP', 'λ-REUSE' and 'ADD' ports. Here three RF channels at 37.5 GHz are interleaved such that the spacing between the optical carrier and the adjacent sidebands, which enter the optical interface via port 1 (IN), is 12.5 GHz. The double notch filter at port 2 reflects 100% of the desired downlink optical carrier (λ_2 in this case) and its corresponding sideband, while transmitting the 'thru' channels to port 6 of the circulator which are routed out from the interface via port 7 (OUT). The FBG at port 3 was designed to reflect 50% of the optical carrier at λ_2 while the remaining 50% of the optical carrier and the corresponding sideband are dropped at port 3 (the DOWNLINK DROP). The 50% of the reflected optical carrier at λ_2 is recovered at port 4 (λ-REUSE) and can be re-used as the uplink optical carrier through being modulated by the upstream mm-wave radio signals [41]. The uplink optical signal can be added back to the main stream via port 5 (ADD) and combines with the 'thru' channels and exits via port 7 (OUT).

B. Simultaneous Multiplexing and Demultiplexing Optical Interface for Wavelength-Interleaved Dense-WDM Fiber-Wireless System

The multifunctional optical interface with add-drop capability introduced in Section IV.A is an ideal passive optical add-drop multiplexer in the antenna BS, especially in a ring

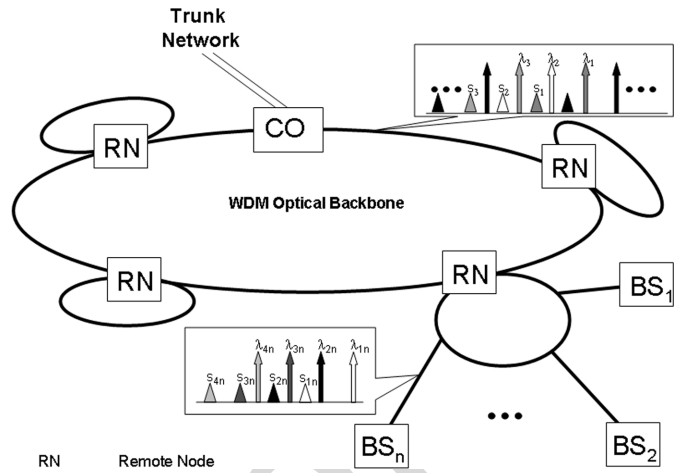

Fig. 13. Schematic diagram of a WDM fiber-wireless ring architecture incorporating $\mathrm{OSSB} + \mathrm{C}$ modulation and wavelength-interleaving schemes.

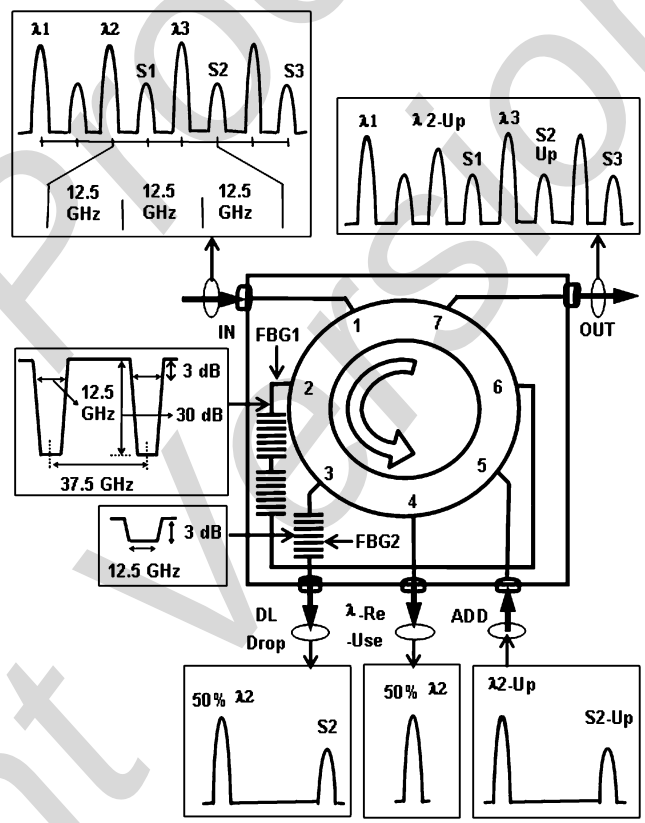

Fig. 14. Multifunctional WDM optical interface with optical add-drop and wavelength re-use functionalities.

architecture. However in a star-tee architecture, an optical interface with simultaneous demultiplexing and multiplexing of several channels is essential in the CO and remote nodes (RNs) of the mm-wave fiber-wireless network. In such an environment, a series of cascaded optical interfaces demonstrated in Section IV.A would be needed which could impose significant performance degradation and limitations in the network dimensioning. Furthermore a series of cascaded interfaces also leads to complex, bulky and expensive demultiplexing/multiplexing subsystems. It is therefore essential to combine these functionalities required in the CO and RNs into a single device

IEEE Proof Print Version

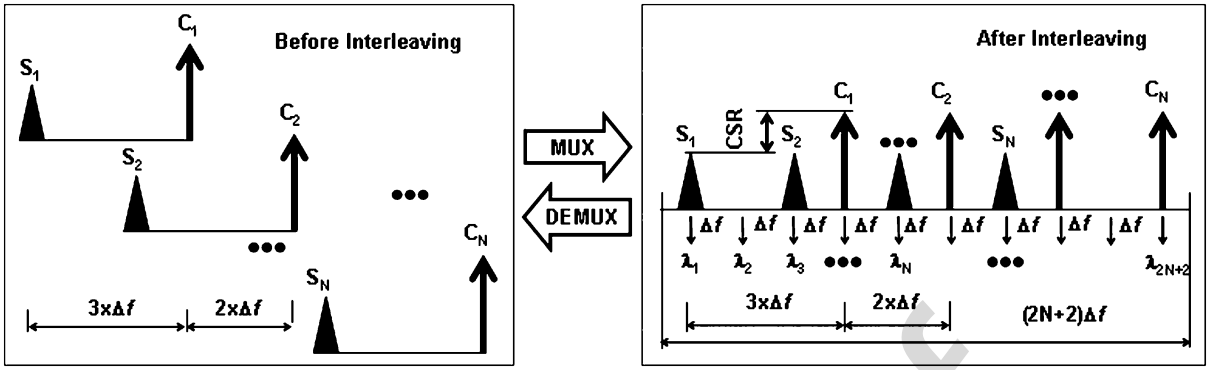

Fig. 15. Schematic depicting the optical spectra of the wavelength-interleaved DWDM mm-wave fiber-wireless channels.

such that cost-effective architectures with reduced complexity can be realized. In addition, it is equally important that passive WDM components in the COs and RNs are transparent to the uplink channels generated by reusing the downlink optical carrier, which allows the BS to be simplified by removing the light source from the uplink path [41].

Simple multiplexing schemes that efficiently interleave DWDM mm-wave fiber-radio channels separated at 25 GHz were proposed in [62]–[64]. A demultiplexing scheme for 25 GHz-separated DWDM mm-wave fiber-radio channels was also proposed in [65], however this scheme requires additional wavelength-selective pre- and post-processing hardware, in addition to custom-developed arrayed waveguide gratings (AWGs). Recently, a simultaneous multiplexing and demultiplexing (MUX/DEMUX) scheme for the CO and the RN in a star-tree fiber-wireless system, which effectively multiplexes and demultiplexes 37.5 GHz-band WI-DWDM mm-wave fiber-radio channels spaced at 25 GHz has been demonstrated [66]. The incorporation of such a scheme in WI-DWDM mm-wave fiber-radio systems can offer efficient multiplexing with improved overall link performance due to a reduction in carrier-sideband-ratio (CSR) as discussed in Section III.C [38]. In addition, the proposed scheme ensures the transparency of the CO and the RN to uplink (UL) channels generated by reusing the downlink (DL) optical carriers, which enables a simple, compact and low cost BS through the complete removal of the UL light source. Fig. 15 shows a schematic of the optical spectra of N optical mm-wave channels before and after interleaving, with a DWDM channel spacing and mm-wave carrier frequency of 2 $\boldsymbol{\Delta} f$ and 3 $\boldsymbol{\Delta} f$, respectively. The optical carriers $C_1, C_2, \ldots C_N$ and their respective modulation sidebands $S_1, S_2, \ldots S_N$ (in OSSB + C modulation format) are interleaved in such a way that the adjacent channel spacing, irrespective of carrier or sideband, becomes $\boldsymbol{\Delta} f$.

Fig. 16(a) shows the schematic of the MUX/DEMUX scheme that simultaneously enables multiplexing and demultiplexing of the proposed WI technique. The MUX/DEMUX comprises a $(2\mathrm{N}+2) \times (2\mathrm{N}+2)$ AWG with a channel bandwidth $\leq \boldsymbol{\Delta} f$ and a channel spacing of $\boldsymbol{\Delta} f$, in conjunction with multiple optical circulators (OCs) and optical isolators (OIs). The input (A) and output (B) ports of the arrayed waveguide grating (AWG), reciprocal in nature, are numbered from 1 to $2\mathrm{N}+2$. The characteristic matrix of the AWG that governs the distribution of different channels at various ports is tabulated in Fig. 16(b). For clarity the proposed scheme is considered to be located at a RN where the UL channels are multiplexed and the DL channels are demultiplexed simultaneously. As shown in Fig. 16(a), the DL WI-DWDM channels from the feeder network enter the RN, are split by a 3 dB coupler, and pass through circulators $\mathrm{OC_{D1}}$ and $\mathrm{OC_{D2}}$ before entering the AWG via the ports $\mathrm{A_1}$ and $\mathrm{A_4}$. The input ports, $\mathrm{A_1}$ and $\mathrm{A_4}$ were selected in such a way that the optical carriers $C_{D1}, C_{D2}, \ldots C_{DN}$ and their respective modulation sidebands $S_{D1}, S_{D2}, \ldots S_{DN}$ are demultiplexed together and exit the AWG via the odd-numbered output ports $\mathrm{B_1} - \mathrm{B_{2N-1}}$ followed by $\mathrm{OC_{M1}} \ldots\ldots \mathrm{OC_{MN}}$, respectively. The circulators $\mathrm{OC_{D1}}, \mathrm{OC_{D2}}$, and $\mathrm{OC_{M1}} \ldots\ldots \mathrm{OC_{MN}}$ work as the means for combining/separating the DL and UL channels to/from a specific port of the AWG, and routing them to the destination accordingly.

In the UL direction, the OSSB + C modulated optical mm-wave channels $(\mathrm{S_{U1}}, \mathrm{C_{U1}}), (\mathrm{S_{U2}}, \mathrm{C_{U2}}), \ldots\ldots\ldots (\mathrm{S_{UN}}, \mathrm{C_{UN}})$, generated by either using the optical carriers that correspond to wavelengths spaced at multiples of the Free Spectral Range (FSR) of the AWG from the DL optical carriers, or by reusing the DL optical carriers recovered by applying a wavelength reuse technique ($\lambda_{\mathrm{UL}} = \lambda_{\mathrm{DL}} \pm \mathrm{n} \times \mathrm{FSR}$, where $\mathrm{n} = 0, 1, 2, 3 \ldots$ etc.), are applied to the AWG via the ports $\mathrm{B_1} - \mathrm{B_{2N-1}}$ followed by the circulators $\mathrm{OC_{M1}} \ldots\ldots \mathrm{OC_{MN}}$. Due to the reciprocal and cyclic characteristics of the AWG, the UL optical carriers and their respective modulation sidebands combine at ports $\mathrm{A_4}$ and $\mathrm{A_1}$, respectively. The composite UL carriers $\mathrm{C_{U1}}, \mathrm{C_{U2}}, \ldots \mathrm{C_{UN}}$ at $\mathrm{A_4}$ are then passed through $\mathrm{OC_{D2}}$ and looped back to the AWG through port $\mathrm{B_2}$ that redistributes the carriers respectively to the odd-numbered $\mathrm{A_{3,}}, \mathrm{A_5}, \mathrm{A_7} \ldots \mathrm{A_{(2N+1)}}$ ports, starting with $\mathrm{A_3}$. To realize the desired interleaving for the UL channels, the distributed UL carriers $\mathrm{C_{U1}}, \mathrm{C_{U2}}, \ldots \mathrm{C_{UN}}$ are again looped back to the AWG via the even-numbered $\mathrm{B_4}, \mathrm{B_6}, \mathrm{B_8}, \ldots \mathrm{B_{(2N+2)}}$ ports, starting with $\mathrm{B_4}$ and the resulting outcome comprises the UL carriers and their respective modulation sidebands interleaved at port $\mathrm{A_1}$ (similar to the spectrum after multiplexing, shown in Fig. 15), which are then routed to the fiber feeder network via the $\mathrm{OC_{D1}}$.

In Fig. 16(a), the multiple loop-backs of the UL carriers through the AWG reduce the CSR of the interleaved UL

IEEE Proof Printversion

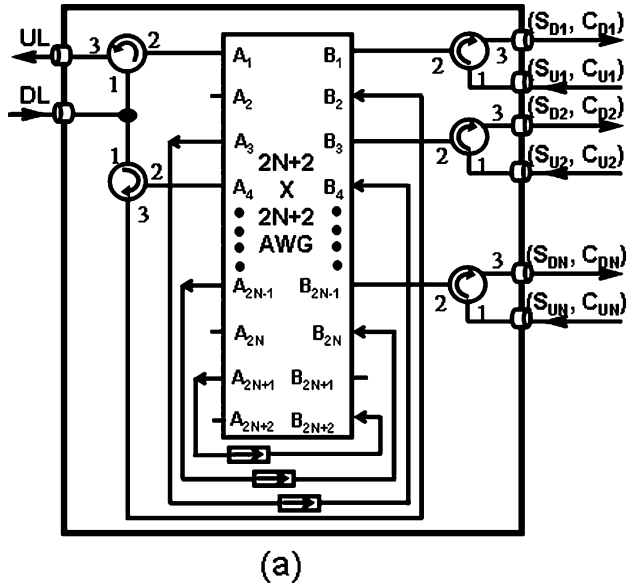

Characteristics Matrix of 2N+2 x 2N+2 AWG

I \ O	B_1	B_2	B_3	•••	B_{N-1}	B_N	B_{N+1}	•••	B_{2N}	B_{2N+1}	B_{2N+2}
A_1	λ_1	λ_2	λ_3		λ_{N-1}	λ_N	λ_{N+1}		λ_{2N}	λ_{2N+1}	λ_{2N+2}
A_2	λ_2	λ_3	λ_4		λ_N	λ_{N+1}	λ_{N+2}		λ_{2N+1}	λ_{2N+2}	λ_1
A_3	λ_3	λ_4	λ_5		λ_{N+1}	λ_{N+2}	λ_{N+3}		λ_{2N+2}	λ_1	λ_2
⋮											
A_{N-1}	λ_{N-1}	λ_N	λ_{N+1}		λ_{2N-3}	λ_{2N-2}	λ_{2N-1}		λ_{N-4}	λ_{N-3}	λ_{N-2}
A_N	λ_N	λ_{N+1}	λ_{N+2}		λ_{2N-2}	λ_{2N-1}	λ_{2N}		λ_{N-3}	λ_{N-2}	λ_{N-1}
A_{N+1}	λ_{N+1}	λ_{N+2}	λ_{N+3}		λ_{2N-1}	λ_{2N}	λ_{2N+1}		λ_{N-2}	λ_{N-1}	λ_N
⋮											
A_{2N}	λ_{2N}	λ_{2N+1}	λ_{2N+2}		λ_{N-4}	λ_{N-3}	λ_{N-2}		λ_{2N-3}	λ_{2N-2}	λ_{2N-1}
A_{2N+1}	λ_{2N+1}	λ_{2N+2}	λ_1		λ_{N-3}	λ_{N-2}	λ_{N-1}		λ_{2N-2}	λ_{2N-1}	λ_{2N}
A_{2N+2}	λ_{2N+2}	λ_1	λ_2		λ_{N-2}	λ_{N-1}	λ_N		λ_{2N-1}	λ_{2N}	λ_{2N+1}

(b)

Fig. 16. Simultaneous multiplexing and demultiplexing of wavelength interleaved channels in a DWDM mm-wave fiber-wireless network: (a) DEMUX/MUX scheme using $2N + 2 \times 2N + 2$ AWG and (b) the input-output characteristics matrix of AWG.

channels by as much as twice the insertion loss $(2 \times \mathrm{IL})$ of the AWG (typically 4–5 dB), which is 8–10 dB. To minimize the effects of the unwanted signals from the even-numbered ports, B_4 to B_{2N+2}, the loop-back paths of the redistributed optical carriers were provided with directional optical isolators that route only the redistributed UL carriers to the AWG and suppress the remaining unwanted signals. Thus, the proposed simultaneous multiplexing and demultiplexing scheme enables efficient multiplexing of the WI-DWDM mm-wave channels in the UL direction, while in the DL direction the circuit also demultiplexes the WI-DWDM channels very effectively.

V. Optical-Wireless Heterogeneous Access Network

In this section, we focus on the role of fiber-wireless in future telecommunication scenarios. Fiber-wireless technology may play a role in high-speed in-building communication and also the merging with other existing wired technology.

A. In-Building Short-Range Application

Extensive research has been carried out in the design of picocellular networks incorporating a fiber-wireless infrastructure for the distribution of in-building wireless signals [67]–[70]. By reducing the cell size and limiting the number of users per cell, this scheme is able to support very high data rate transmission per user especially in a dense in-building scenario. It is interesting to note that due to the relatively short distances in a building; most of the optical distribution for in-building architectures uses multimode fiber.

One particular solution for an in-building picocellular network is shown in Fig. 17, demonstrated by Corning, USA, for the distribution of Wi-Fi signals (IEEE 802.11) [67]. A large number of densely packed picocells are connected via an optical backbone of multimode fiber to a CO. In this demonstration, low-cost VCSEL technology was used to further improve the cost-effectiveness of the overall architecture [67], [68].

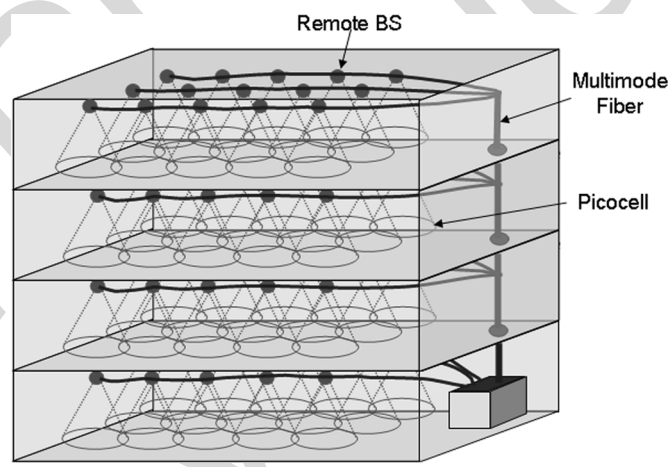

Fig. 17. Schematic of densely packed picocellular layout for in-building high-speed communications.

B. MultiBand Transmission

With various last mile solutions emerging, it is essential for RF fiber-wireless access technology to coexist with other optical access technologies, thereby being able to merge/integrate within the existing infrastructure and ensure transparency in the remote access nodes. Much research has been targeted towards wireless signal distribution over passive-optical-networks (PONs) using subcarrier multiplexing to isolate the wired and wireless signals [71]–[73]. Various wireless standards including 3G, WiFi and WiMAX have been demonstrated overlaying on the PON infrastructure [71]–[73]. Apart from the distribution of wireless signals at lower microwave frequencies, it is also beneficial to develop an integrated optical access infrastructure to simultaneously distribute multiple signal bands. A number of simultaneous modulation techniques have been proposed which enable baseband (BB), IF and RF technologies to be seamlessly

IEEE Proof Print Version

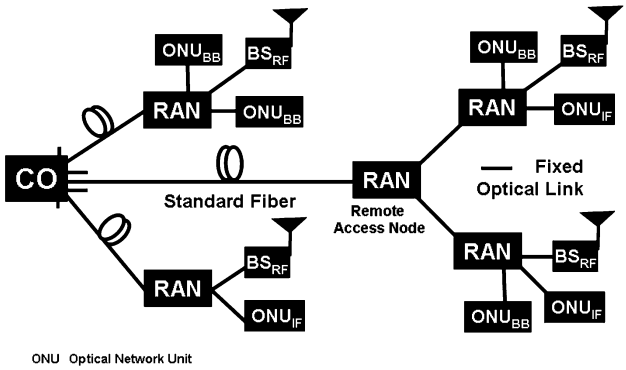

Fig. 18. Schematic of an integrated optical access network.

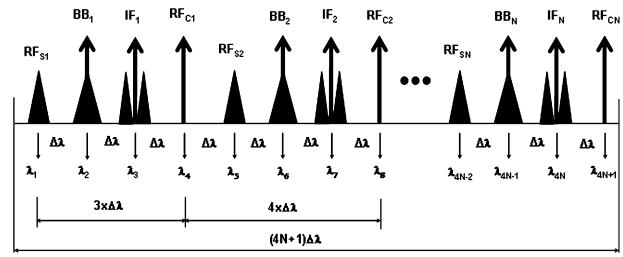

Fig. 19. Schematic showing the optical spectrum of the multiplexed optical RF, IF and baseband signals for optical access integration.

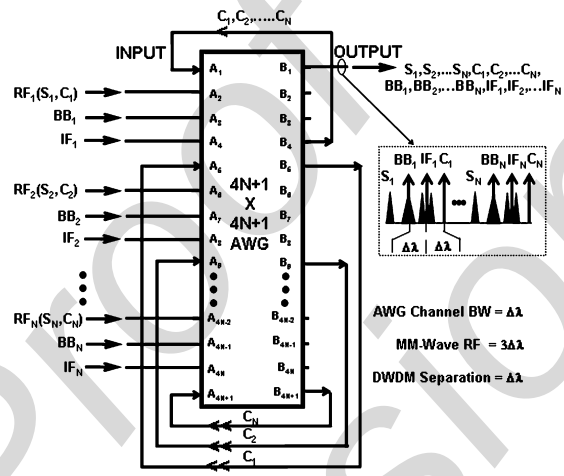

Fig. 20. Schematic of the hybrid multiplexing of RF, IF and baseband data for integrated optical access environment.

combined and distributed together [74]–[78]. However, the performance of these methods has been limited by the nonlinearity as well as the optimum modulating conditions of the modulators. Also, these techniques require significant changes both in the existing mini switching centers (MSCs) and the remote access nodes (RANs). An alternative approach to realizing an integrated DWDM network in the metro and higher network domains is to incorporate a number of MSCs suitable for the role of a CO feeding clusters of BSs that service the RF fiber-radio system [79]. This technique has the limitation of requiring a dedicated optical network in the access domain. However, if the passive WDM components (e.g., multiplexers, demultiplexers, OADMs) in the existing MSCs and RANs can be provisioned instead to support RF as well as other conventional BB and IF access technologies thereby avoiding significant changes in the existing setup, an effective integrated optical access network can be easily realized. Shown in Fig. 18 is the schematic of one possible solution for an integrated optical access incorporating RF, BB, and IF in a WDM environment highlighting the merging of wireless and wireline optical access applications.

One of the many hybrid multiplexing schemes that effectively multiplexes the optical RF, BB and IF signals in a DWDM access network has been proposed and demonstrated in [70]. Fig. 19 shows the optical spectrum of the proposed multiplexing scheme comprising N channels for each of the RF, BB and IF signals, with a DWDM channel separation of $\boldsymbol{\Delta}\lambda$. The RF carrier frequency is an integer multiple of the DWDM channel separation ($\lambda_{\mathrm{RF}} = \mathrm{n} \times \boldsymbol{\Delta}\lambda$, where $\mathrm{n} = 1, 2, 3, \ldots$), for instance, 3 $\boldsymbol{\Delta}\lambda$. The signals are multiplexed in such a way that after multiplexing, the adjacent channel spacing, irrespective of RF, BB or IF signals, is $\boldsymbol{\Delta}\lambda$. Fig. 20 depicts the configuration of the proposed multiplexing scheme that realizes such a hybrid multiplexed spectrum with the input and output spectra shown in the insets. It consists of a $(4\mathrm{N}+1) \times (4\mathrm{N}+1)$ AWG with bandwidth $\boldsymbol{\Delta}\lambda$ equal to the adjacent channel spacing of the desired multiplexing scheme. The input (A) and output (B) ports of the AWG are numbered from 1 to $4\mathrm{N}+1$. The optically modulated RF, BB, and IF input signals enter the AWG starting with port A_2 to $\mathrm{A}_{4\mathrm{N}}$, leaving the 5th, 9th, 13th, $\ldots, (4\mathrm{N}+1)$ th ports unused. The RF channels are modulated in $\mathrm{OSSB} + \mathrm{C}$ modulation format. The AWG combines all the modulation sidebands $\mathrm{S}_1, \mathrm{S}_2, \ldots, \mathrm{S}_\mathrm{N}$ of the RF channels as well as the BB and IF channels at the output port B_1. Due to the cyclic characteristics of the AWG, the optical carriers $\mathrm{C}_1, \mathrm{C}_2, \ldots, \mathrm{C}_\mathrm{N}$ of the RF channels also exit as a composite signal via the output port B_4. The composite carriers are then looped back to the AWG through the input port A_1 that redistributes the carriers to the 5th, 9th, 13th, $\ldots, (4\mathrm{N}+1)$th output ports. To realize the desired multiplexing, the distributed carriers are again looped back to the AWG via the unused input ports and the resultant output at port B_1 is the RF, BB, and IF signals multiplexed with the BB and IF channels interleaved between the optical carrier and the modulation sideband of the RF channels. The multiplexed spectrum can be seen in the insets of Fig. 20. As before, due to the loop-backs the optical carriers of the RF channels are suppressed by as much as twice the insertion loss of the AWG compared to the modulation sidebands. Thus, the proposed multiplexing scheme enables a carrier subtraction technique that reduces the carrier-to-sideband ratio of the RF channels by 8 to 10 dB.

VI. Conclusion

Millimeter-wave fiber-wireless technology has been actively pursued and investigated in the past two decades. In this paper, we have provided an overview of the research progress in this area ranging from signal transportation, impairments to WDM based subsystem interfaces and optical-wireless integrated access infrastructure. In presenting this overview, we have focused the discussions on techniques and technologies that have been investigated and demonstrated for the implementation of high-performance mm-wave fiber-wireless systems. We have

IEEE Proof Print Version

also touched upon the importance of optical-wireless integration for future heterogeneous access infrastructure for seamless distribution of multiple bands signal over the same optical platform.

ACKNOWLEDGMENT

The authors would like to acknowledge the contribution of Dr. M. Attygalle of Defence Science and Technology Organisation (DSTO), Australia, for some of the work presented in this paper. They also would like to thank Dr. M. Sauer of Corning, for the figure used in this paper.

REFERENCES

[1] T. S. Rappaport, *Wireless Communications: Principles & Practice*, 2nd ed. Englewood Cliffs, NJ: Prentice Hall, 2002.

[2] ***[Page numbers?]***H. Ogawa, "Millimeter-wave wireless personal network systems," in *Proc. IEEE Radio Frequency Integrated Circuits (RFIC) Symp.*, Jun. 2006.

[3] J. J. O'Reilly, P. M. Lane, R. Heidemann, and R. Hofstetter, "Optical generation of very narrow linewidth millimetre wave signals," *Electron. Lett.*, vol. 28, no. 5, pp. 2309–2311, 1992.

[4] S. Levy, R. Nagarajan, R. J. Helkey, P. Humphrey, and J. E. Bowers, "Millimetre-wave fibre-optic PSK subcarrier transmission at 35 GHz over 6.3 km using a grating external cavity semiconductor laser," *Electron. Lett.*, vol. 29, no. 8, pp. 690–691, 1993.

[5] G. H. Smith and D. Novak, "Broadband millimeter-wave fiber-radio network incorporating remote up/downconversion," in *Proc. IEEE MTTS*, Baltimore, MD, 1998, pp. 1509–1512, TH3C-1.

[6] C. Lim, A. Nirmalathas, D. Novak, R. Waterhouse, and G. Yoffe, "Millimeter-wave broadband fiber-wireless system incorporating baseband data transmission over fiber and remote LO delivery," *J. Lightw. Technol.*, vol. 18, no. 10, pp. 1355–1363, Oct. 2000.

[7] G. J. Meslener, "Chromatic dispersion induced distortion of modulated monochromatic light employing direct detection," *IEEE J. Quantum Electron.*, vol. QE-20, no. 10, pp. 1208–1216, 1984.

[8] H. Schmuck, "Comparison of optical millimeter-wave system concepts with regard to chromatic dispersion," *Electron. Lett.*, vol. 31, no. 21, pp. 1848–1849, 1995.

[9] U. Gliese, S. Norskov, and T. N. Nielsen, "Chromatic dispersion in fiber-optic microwave and millimeter-wave links," *IEEE Trans. Microw. Theory Tech.*, vol. 44, no. 10, pp. 1716–1724, 1996.

[10] C. Lim, A. Nirmalathas, D. Novak, R. Waterhouse, and G. Yoffe, "A WDM architecture for millimeter-wave fiber-radio systems incorporating baseband transmission," in *Proc. MWP'99*, Melbourne, Australia, 1999, pp. 127–130.

[11] E. Skafidas, F. Zhang, B. Yang, B. N. Wicks, Z. Liu, C. M. Ta, Y. Mo, K. Wang, G. Felic, P. Nadagouda, T. Walsh, W. Shieh, I. Mareels, and R. J. Evans, "A 60-GHz transceiver on CMOS," in *Proc. Microw. Photon. ointly Held With the 2008 Asia-Pacific Microw. Photon. Conf. (MWP2008/APMP2008)*, Gold Coast, Australia, 2008, pp. 306–309.

[12] B. Yang, Y. Mo, K. Wang, Y. Feng, B. Wicks, C. Ta-Minh, F. Zhang, Z. Liu, C. Liu, G. Felic, P. Nadagouda, T. Walsh, and E. Skafidas, "Implementation of a gigabit per second millimetre-wave transceiver on CMOS," in *Proc. Int. Conf. Wireless Broadband Ultra Wideband Commun. (AusWireless2007)*, 2007, pp. 71–71.

[13] R. Soref, "The past, present, and future of silicon photonics," *IEEE J. Sel. Topics Quantum Electron.*, vol. 12, no. 6, pp. 1678–1687, Nov./Dec. 2006.

[14] R. Hofstetter, H. Schmuck, and R. Heidemann, "Dispersion effects in optical millimeter-wave systems using self-heterodyne method for transport and generation," *IEEE Trans. Microw. Theory Tech.*, vol. 43, no. 9, pp. 2263–2269, Sep. 1995.

[15] G. H. Smith, D. Novak, and Z. Ahmed, "Technique for optical SSB generation to overcome dispersion penalties in fibre-radio systems," *Electron. Lett.*, vol. 33, no. 1, pp. 74–75, 1997.

[16] R. A. Griffin, P. M. Lane, and J. J. O'Reilly, "Dispersion-tolerant subcarrier data modulation of optical millimetre-wave signals," *Electron. Lett.*, vol. 32, no. 24, pp. 2258–2260, 1996.

[17] J. M. Fuster, J. Marti, and J. L. Corral, "Chromatic dispersion effects in electro-optical upconverted millimetre-wave fibre optic links," *Electron. Lett.*, vol. 33, no. 23, pp. 1969–1970, 1997.

[18] ***[Month?]***Z. Jia, J. Yu, and G.-K. Chang, "A full-duplex radio-over-fiber system based on optical carrier suppression and reuse," *IEEE Photon. Technol. Lett.*, vol. 18, no. 16, pp. 1726–1728, 2006.

[19] J. Park, W. V. Sorin, and K. Y. Lau, "Elimination of the fibre chromatic dispersion penalty on 1550 nm millimetre-wave optical transmission," *Electron. Lett.*, vol. 33, no. 6, pp. 512–513, 1997.

[20] ***[Month?][Month?]***K. Yonenaga and N. Takachio, "A fiber chromatic dispersion compensation technique with an optical SSB transmission in optical homodyne detection systems," *IEEE Photon. Technol. Lett.*, vol. 5, no. 8, pp. 949–951, 1993.

[21] ***[Month?]***E. Vourch, D. Le Berre, and D. Herve, "Lightwave single sideband wavelength self-tunable filter using InP:Fe crystal for fiber-wireless systems," *IEEE Photon. Technol. Lett.*, vol. 14, no. 2, pp. 194–196, 2002.

[22] J. Capmany, D. Pastor, P. Munoz, S. Sales, B. Ortega, and A. Martinez, "WDM-SSB generation and dispersion mitigation in radio over fiber systems with improved performance using an AWG multiplexer with flat top resonances," in *Proc. Microw. Photon.*, Budapest, Hungary, 2003, pp. 39–42.

[23] J. Marti, J. M. Fuster, and R. I. Laming, "Experimental reduction of chromatic dispersion effects in lightwave microwave/millimetre-wave transmissions using tapered linearly chirped fibre gratings," *Electron. Lett.*, vol. 33, no. 13, pp. 1170–1171, 1997.

[24] ***[Month?]***F. Ramos, J. Marti, V. Polo, and J. M. Fuster, "On the use of fiber-induced self-phase modulation to reduce chromatic dispersion effects in microwave/millimeter-wave optical systems," *IEEE Photon. Technol. Lett.*, vol. 10, no. 10, pp. 1473–1475, 1998.

[25] ***[Month?]***F. Ramos, J. Marti, and V. Polo, "Compensation of chromatic dispersion effects in microwave/millimeter-wave optical systems using four-wave-mixing induced in dispersion-shifted fibers," *IEEE Photon. Technol. Lett.*, vol. 11, no. 9, pp. 1171–1173, 1999.

[26] P. C. Won, W. Zhang, and J. A. R. Williams, "Self-phase modulation dependent dispersion mitigation in high power SSB and $\mathrm{DSB}+\mathrm{dispersion}$ compensated modulated radio-over-fiber links," in *Proc. IEEE MTTS IMS*, 2006, pp. 1947–1950.

[27] J. Marti and F. Ramos, "Compensation for dispersion-induced nonlinear distortion in subcarrier systems using optical-phase conjugation," *Electron. Lett.*, vol. 33, no. 9, pp. 792–794, 1997.

[28] C. Lim, A. Nirmalathas, D. Novak, R. S. Tucker, and R. B. Waterhouse, "Technique for increasing optical spectral efficiency in millimeter-wave WDM fiber-radio," *Electron. Lett.*, vol. 37, no. 16, pp. 1043–1045, 2001.

[29] H. Toda, T. Yamashita, K.-I. Kitayama, and T. Kuri, "A DWDM mm-wave fiber-radio system by optical frequency interleaving for high spectral efficiency," in *Proc. MWP*, Long Beach, CA, 2001, pp. 85–88.

[30] C. Lim, A. Nirmalathas, D. Novak, and R. B. Waterhouse, "Capacity analysis for WDM fiber-radio backbones with star-tree and ring architecture incorporating wavelength interleaving," *J. Lightw. Technol.*, vol. 21, no. 12, pp. 3308–3315, Dec. 2003.

[31] K. J. Williams and R. D. Esman, "Stimulated Brillouin scattering for improvement of microwave fibre-optic link efficiency," *Electron. Lett.*, vol. 30, no. 23, pp. 1965–1966, 1994.

[32] S. Tonda-Goldstein, D. Dolfi, J.-P. Huignard, G. Charlet, and J. Chazelas, "Stimulated brillouin scattering for microwave signal modulation depth increase in optical links," *Electron. Lett.*, vol. 36, no. 11, pp. 944–946, 2000.

[33] M. J. LaGasse, W. Charczenko, M. C. Hamilton, and S. Thaniyavarn, "Optical carrier filtering for high dynamic range fibre optic links," *Electron. Lett.*, vol. 30, no. 25, pp. 2157–2158, 1994.

[34] R. D. Esman and K. J. Williams, "Wideband efficiency improvement of fiber optic systems by carrier subtraction," *IEEE Photon. Technol. Lett.*, vol. 7, no. 2, pp. 218–220, 1995.

[35] H. Toda, T. Yamashita, T. Kuri, and K. Kitayama, "25-GHz channel spacing DWDM multiplexing using an arrayed waveguide grating for 60-GHz band radio-on-fiber systems," in *Proc. Microwave Photon.*, Budapest, Hungary, 2003, pp. 287–290.

[36] M. Attygalle, C. Lim, G. J. Pendock, A. Nirmalathas, and G. Edvell, "Transmission improvement in fiber wireless links using fiber Bragg gratings," *IEEE Photonics Technol. Lett.*, vol. 17, no. 1, pp. 190–192, Jan. 2005.

[37] M. Attygalle, C. Lim, and A. Nirmalathas, "Extending optical transmission distance in fiber wireless links using passive filtering in conjunction with optimized modulation," *J. Lightw. Technol.*, vol. 24, no. 4, pp. 1703–1709, Apr. 2006.

IEEE Proof
Printversion

[38] C. Lim, M. Attygalle, A. Nirmalathas, D. Novak, and R. Waterhouse, "Optical modulation depth analysis for improving transmission performance in fiber-radio links," *IEEE Trans. Microw. Theory Tech.*, vol. 54, no. 5, pp. 2181–2187, May 2006.

[39] D. Wake, D. Johansson, and D. G. Moodie, "Passive pico-cell—New in wireless network infrastructure," *Electron. Lett.*, vol. 33, no. 5, pp. 404–406, 1997.

[40] A. Stohr, K. Kitayama, and D. Jager, "Full-duplex fiber-optic RF subcarrier transmission using a dual-function modulator/photodetector," *IEEE Trans. Microw. Theory Tech.*, vol. 47, no. 7, pp. 1338–1341, Jul. 1999.

[41] A. Nirmalathas, D. Novak, C. Lim, and R. B. Waterhouse, "Wavelength re-use in the WDM optical interface of a millimeter-wave fiber wireless antenna base-station," *IEEE Trans. Microw. Theory Tech.*, vol. 49, no. 10, pp. 2006–2012, Oct. 2001.

[42] ***[Month?]*** L. Chen, H. Wen, and S. Wen, "A radio-over-fiber system with a novel scheme for millimeter-wave generation and wavelength reuse for up-link connection," *IEEE Photon. Technol. Lett.*, vol. 18, no. 19, pp. 2056–2058, 2006.

[43] J. Yu, Z. Jia, T. Wang, and G.-K. Chang, "A novel radio-over-fiber configuration using optical phase modulator to generate an optical mm-wave and centralized lightwave for uplink connection," *IEEE Photon. Technol. Lett.*, vol. 19, no. 3, pp. 140–142, 2007.

[44] T. Kurniawan, A. Nirmalathas, C. Lim, D. Novak, and R. Waterhouse, "Performance analysis of optimized millimeter-wave fiber radio links," *IEEE Trans. Microw. Theory Tech.*, vol. 54, no. 2, pp. 921–928, Feb. 2006.

[45] W. H. Chen and W. I. Way, "Multichannel single-sideband SCM/DWDM transmission systems," *J. Lightw. Technol.*, vol. 22, no. 7, pp. 1679–1693, 2004.

[46] ***[Month?]*** S.-H. Park and Y.-W. Choi, "Significant suppression of the third intermodulation distortion in transmission system with optical feedback forward linearized transmitter," *IEEE Photonics Technol. Lett.*, vol. 17, no. 6, pp. 1280–1282, 2005.

[47] ***[Month?]*** T. Ismail, C.-P. Liu, J. E. Mitchell, and A. J. Seeds, "High-dynamic-range wireless-over-fiber link using feedforward linearization," *J. Lightw. Technol.*, vol. 25, no. 11, pp. 3274–3282, 2007.

[48] S. H. Lee, J. M. Kang, Y. Y. Won, H. C. Kwon, and S. K. Han, "Linearization of RoF optical source by using light-injected gain modulation," in *Proc. Microw. Photon.* , Seoul, Korea, 2005, pp. 265–268.

[49] ***[Month?]*** L. Roselli, V. Borgioni, F. Zepparelli, F. Ambrosi, M. Comez, P. Faccin, and A. Cassini, "Analog laser predistortion for multiservice radio-over-fiber systems," *J. Lightw. Technol.*, vol. 21, no. 5, pp. 1211–1223, 2003.

[50] A. R. Shah and B. Jalali, "Adaptive equalisation for broadband predistortion linearisation of optical transmitters," *IEE Proc. Optoelectronics*, vol. 152, no. 1, pp. 16–32, 2005.

[51] ***[Month?]*** A. Djupsjobacka, "A linearization concept for integrated-optic modulators," *IEEE Photon. Technol. Lett.*, vol. 4, no. 8, pp. 869–872, 1992.

[52] H. Skeie and R. Johnson, "Linearization of electro-optic modulators by a cascade coupling of phase modulating electrodes," *Proc. SPIE-Int. Soc. Opt. Eng.*, vol. 1583, pp. 153–164, 1991.

[53] ***[Month?]*** S. Korotky and R. DeRidder, "Dual parallel modulation schemes for low-distortion analog optical transmission," *IEEE J. Sel. Areas Commun.*, vol. 8, pp. 1377–1381, 1990.

[54] L. S. Fock and R. S. Tucker, "Simultaneous reduction of intensity noise and distortion in semiconductor lasers by feed-forward compensation," *Eletron. Lett.*, vol. 27, no. 14, pp. 1297–1299, 1991.

[55] X. N. Fernando and A. B. Sesay, "Fibre-wireless channel estimation using correlation properties of PN sequences," *Can. J. Elect. Comp. Eng.*, pp. 43–47, 2001.

[56] S. A. Fechtel and H. Meyr, "An investigation of channel estimation and equalization techniques for moderately rapid fading HF-channels," in *Proc. IEEE Int. Conf. Commun.*, 1991, pp. 768–772.

[57] P. A. Gamage, A. Nirmalathas, C. Lim, E. Wong, D. Novak, and R. Waterhouse, "Experimental demonstration of digitized RF transport over optical fiber links," in *Proc. 2008 IEEE Int. Topical Meeting MWP2008/APMP2008*, Gold Coast, Australia, Oct. 2008, pp. 15–18.

[58] ***[Page numbers?]*** Y. Yang, C. Lim, P. Gamage, and A. Nirmalathas, "Demonstration and performance analysis of an uplink based on digitized RF-over-fiber signal transport," in *Proc. APMP2009*, Beijing, China, 2009.

[59] D. M. Akos, M. Stockmaster, J. B. Y. Tsui, and J. Caschera, "Direct bandpass sampling of multiple distinct RF signals," *IEEE Trans. Commun.*, vol. 47, no. 7, pp. 983–988, 1999.

[60] G. C. Valley, "Photonic analog-to-digital converters," *Opt. Exp.*, vol. 15, no. 5, pp. 1955–1982, 2007.

[61] ***[Month?]*** M. Bakaul, A. Nirmalathas, and C. Lim, "Multifunctional WDM optical interface for millimeter-wave fiber-radio antenna base station," *J. Lightw. Technol.*, vol. 23, no. 3, pp. 1210–1218, 2005.

[62] H. Toda, T. Yamashita, T. Kuri, and K. Kitayama, "25-GHz channel spacing DWDM multiplexing using an arrayed waveguide grating for 60-GHz band radio-on-fiber systems," in *Proc. Microw. Photon. (MWP)*, Budapest, Hungary, 2003, pp. 287–290.

[63] M. Bakaul, A. Nirmalathas, C. Lim, D. Novak, and R. Waterhouse, "Simplified multiplexing scheme for wavelength-interleaved DWDM millimetre-wave fiber-radio systems," in *Proc. ECOC 2005*, Glasgow, U.K., 2005, Th1.4.4..

[64] M. Bakaul, A. Nirmalathas, C. Lim, D. Novak, and R. B. Waterhouse, "Efficient multiplexing scheme for wavelength-interleaved DWDM millimeter-wave fiber-radio systems," *IEEE Photon. Technol. Lett.*, vol. 17, no. 12, pp. 2718–2720, Dec. 2005.

[65] ***[Month?]*** H. Toda, T. Yamashita, T. Kuri, and K. I. Kitayama, "Demultiplexing using an arrayed-waveguide grating for frequency-interleaved DWDM millimeter-wave radio-on-fiber systems," *J. Lightw. Technol.*, vol. 21, no. 8, pp. 1735–1741, 2003.

[66] M. Bakaul, A. Nirmalathas, C. Lim, D. Novak, and R. B. Waterhouse, "Simultaneous multiplexing and demultiplexing of wavelength-interleaved channels in DWDM millimeter-wave fiber-radio networks," *J. Lightw. Technol.*, vol. 24, no. 9, pp. 3341–3352, Sep. 2006.

[67] ***[Month?]*** M. Sauer, A. Kobyakov, and J. George, "Radio over fiber for picocellular network architectures," *J. Lightw. Technol.*, vol. 25, no. 11, pp. 3301–3320, 2007.

[68] M. Y. W. Chia, B. Luo, M. L. Yee, and E. J. Z. Hao, "Radio over multimode fibre transmission for wireless LAN using VCSELs," *Electron. Lett.*, vol. 39, no. 15, pp. 1143–1144, 2003.

[69] ***[Month?]*** C. Carlsson, A. Larsson, and A. Alping, "RF transmission over multimode fibers using VCSELs—Comparing standard and high-bandwidth multimode fibers," *J. Lightw. Technol.*, vol. 22, no. 7, pp. 1694–1700, 2004.

[70] C. Lethien, C. Loyez, and J.-P. Vilcot, "Potentials of radio over multimode fiber systems for the in-buildings coverage of mobile and wireless LAN applications," *IEEE Photon. Technol. Lett.*, vol. 17, no. 12, pp. 2793–2795, 2005.

[71] A. Brizido, M. Lima, R. Nogueira, P. Andre, and A. Teixeira, "3G radio distribution based on directly modulated lasers over passive transparent optical networks," in *Proc. IMOC2007*, 2007, pp. 658–661.

[72] H. Le Bras and M. Moignard, "Distribution of 3G base stations on passive optical network architecture," in *Proc. Microw. Photon. (MWP)*, 2006, pp. 1–4.

[73] ***[Month?]*** H. Kosek, Y. He, X. Gu, and X. N. Fernando, "All-optical demultiplexing of WLAN and cellular CDMA radio signals," *J. Lightw. Technol.*, vol. 25, no. 6, pp. 1401–1409, 2007.

[74] M. Chacinski, A. Djupsjobacka, U. Westergren, R. Schatz, P.-Y. Foniallaz, E. Tipsiwannakul, and E. Udvary, "400 km transmission of STM-16 data on baseband and DVBT on 40 GHz subcarrier," in *Proc. Int. Conf. Telecommun. (ICT)*, 2008, pp. 1–3.

[75] ***[Month?]*** A. Martinez, V. Polo, and J. Marti, "Simultaneous baseband and RF optical modulation scheme for feeding wireless and wireline heterogeneous access networks," *IEEE Trans. Microw. Theory Tech.*, vol. 49, no. 10, pp. 2018–2024, 2001.

[76] ***[Month?]*** K. Ikeda, T. Kuri, and K. Kitayama, "Simultaneous three-band modulation and fiber-optic transmission of 2.5-Gb/s baseband, microwave- and 60-GHz-band signals on a single wavelength," *J. Lightw. Technol.*, vol. 21, no. 12, pp. 3194–3202, 2003.

[77] ***[Month?]*** Z. Jia, J. Yu, Y. Hsueh, A. Chowdhury, H. Chien, J. A. Buck, and G.-K. Chang, "Multiband signal generation and dispersion-tolerant transmission based on photonic frequency tripling technology for 60-GHz radio-over-fiber systems," *IEEE Photon. Technol. Lett.*, vol. 20, pp. 1470–1472, 2008.

[78] M. Bakaul, A. Nirmalathas, C. Lim, D. Novak, and R. Waterhouse, "Hybrid multiplexing towards the integration of millimetre-wave fiber-radio systems in DWDM access networks," in *Proc. LEOS 2005*, Sydney, Australia, 2005, pp. 577–578.

IEEE Proof Print Version

[79] ***[Month?]*** C. Lim, A. Nirmalathas, M. Attygalle, D. Novak, and R. B. Waterhouse, "On the merging of millimeter-wave fiber-radio backbone with 25 GHz WDM ring networks," *J. Lightw. Technol.*, vol. 21, no. 10, pp. 2203–2210, 2003.

[80] ***[Month?]*** M. Bakaul, A. Nirmalathas, C. Lim, D. Novak, and R. Waterhouse, "Hybrid multiplexing of multiband optical access technologies towards an integrated DWDM network," *IEEE Photon. Technol. Lett.*, vol. 18, no. 21, pp. 2311–2313, 2006.

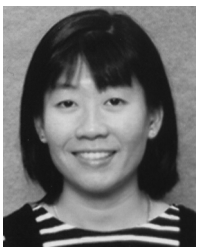

Christina Lim (S'98–M'00–SM'06) received the B.E. (first-class hons) and Ph.D. degrees in electrical and electronic engineering from the University of Melbourne, Australia, in 1995 and 2000, respectively.

In 1999, she joined the Photonics Research Laboratory (a member of the Australian Photonics Cooperative Research Centre) at the University of Melbourne. She is currently an Associate Professor and Principal Research Fellow with the ARC Special Research Centre for Ultra-Broadband Information Networks (CUBIN), Department of Electrical and Electronic Engineering, at the same university. Between 2003 and 2005, she was the Project Leader of the Australian Photonics CRC Fiber-to-the-Premises Challenge Project. In January 2007 and 2008, she was a Visiting Scholar at the Department of Electrical and Computer Engineering, University of California at San Diego. Her research interests include fiber-wireless access technology, modeling of optical and wireless communication systems, microwave photonics, application of mode-locked lasers, optical network architectures and optical signal monitoring. She has written more than 150 technical articles in these areas.

Dr. Lim was also one of the recipients of the 1999 IEEE Lasers and Electro-Optics Society (IEEE LEOS) Graduate Student Fellowship and a recipient of the Australian Research Council Australian Research Fellowship. She is currently a member of the Steering Committee for the Asia Pacific Microwave Photonics and IEEE Topical Meeting on Microwave Photonics Conference series.

Ampalavanapillai (Thas) Nirmalathas <MEMBERSHIP YEARS?> received the B.E and Ph.D. degrees in electrical and electronic engineering from the University of Melbourne, Australia, in 1993 and 1998, respectively.

He is currently a Professor in the Department of Electrical and Electronic Engineering at the University of Melbourne, Australia. He is also the Director of Melbourne Engineering Research Institute (MERIT) which brings the entire research activity of the Melbourne School of Engineering within one institute. Between 2000 and 2004, he was the Director of Photonics Research Laboratory (Melbourne Node of Australian Photonics CRC) and also the Program Leader of Telecommunications Technologies Program. From 2004 to 2006, he was the Program Leader for the Network Technologies Research Program in NICTA. He was also the acting Lab Director of VRL in 2007. Between 2006 and 2008, He was the Research Group Manager of the Networked Systems Group of Victoria Research Laboratory (VRL) at the National ICT Australia (NICTA), a premier Australian research centre of excellence in ICT. He has written more than 200 technical articles and currently hold 2 active international patents. His research interests include microwave photonics, semiconductor lasers, fiber-radio systems, optical access networks, optical performance monitoring and WDM packet switched networks.

Dr. Nirmalathas is currently the chair of steering committees of Asia Pacific Microwave Photonics and IEEE Topical Meeting on Microwave Photonics Conference series. He is also a member of the Steering Committee for the International Conference on Optical Internet (COIN). He was also Guest Editor for Special Issue on Opto-Electronics and Communications of the IEICE Transactions in Communications. He was the General Co-Chair of 2008 IEEE Topical Meeting on Microwave Photonics/Asia Pacific Microwave Photonics 2008. He is currently an Associate Editor of IEEE/OSA JOURNAL OF LIGHTWAVE TECHNOLOGY. He is a member of Optical Society of America and a Fellow of the Engineers Australia.

Masuduzzaman Bakaul <EDUCATIONAL BACKGROUND?>

Prior to joining the University of Melbourne, Dr. Bakaul was an optical engineer with Fiber Optic Network Solutions (FONS) Bangladesh LTD and worked there till 2001. Since his inception with the University of Melbourne, as a Ph.D. student in 2002, and as a researcher in 2006, he has authored or co-authored 46 refereed publications in these areas, including 14 journals, 7 invited papers, 23 conference contributing papers, 1 book chapter, and 1 provisional patent. Most of these papers were published in Tier 1 IEEE, OSA, IEE journals and conferences with the highest impact factors. He is a leading researcher and developer in several areas of photonics and microwave communications, such as radio-over-fibre, optical-wireless integration, OFDM-over-fibre towards 100 Gb/s Ethernet and beyond, and optical performance monitoring. He has contributed to NICTA's commercialization activities through his research resulting in a start-up company. He has also contributed to organisation of many international conferences. Currently he supervises two Ph.D. students and contributes to teaching of two postgraduate subjects.

Dr. Bakaul's paper in IEEE LEOS'2005 conference was awarded the LEOS/Newport/Spectra-Physics Research Excellence Award, which was featured in April 2006 issue of IEEE LEOS monthly newsletter.

Prasanna Gamage (S'05) received the B.Sc. degree in engineering (second class uppers hons), the M.Sc. degree in telecommunication engineering from the University of Moratuwa, Sri Lanka, and RMIT University, Australia, in 1996 and 2004, respectively. He receieved the Ph.D. degree in electrical and electronic engineering from the University of Melbourne, Melbourne, Australia in 2009.

He joined Sri Lanka Telecomm, where he worked from 1998 to 1999. He joined eB2B.com, Australia from 2000 till 2002. **<CURRENT POSITION?>**His research focuses on digitized RF transport optical link for future fiber radio systems.

K. L. (Alan) Lee received the B.E., M.Phil., and Ph.D. degree in electronic engineering from the Chinese University of Hong Kong, in 1998, 2000, and 2003 respectively. His Ph.D. study included experimental study of time and wavelength interleaved short pulse generation, photonic analog to digital converter and multicasting of digital signal. From January to April 2004, he joined the optoelectronic laboratory at the same university as a postdoctoral fellow and continued the research on photonic analogue to digital converter.

In May 2004, he moved to the University of Melbourne (UoM) as a Research Fellow, and has been working actively in the areas of high speed multiwavelength optical pulses generation for the application of ADC, multicasting of digital data, optical label processing, passive optical networks, and optical imaging. In July and August 2005, he was invited to work as a Guest Researcher at the National Institute of Information and Communications Technology (NICT), Japan and work on all-optical packet switch. In November 2006, he has been invited to work as a visiting research scholar at the McGill University and work on optical sources for the application in optical coherence tomography. He is currently a senior research fellow at the ARC Special Research Centre for Ultra-Broadband Information Networks (CUBIN), UoM. Recent years, he is developing new approaches for long-reach broadband access and radio-over-fiber. His research interest also includes optical packet switching, microwave photonic and optical signal processing.

IEEE Proof
Final Version

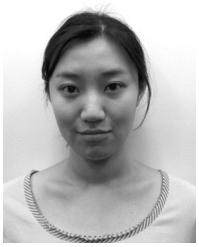

Yizhuo Yang received THE B.S. degree (first-class hons) in applied physics from BeiHang University, Beijing, China in 2007. She is currently working towards the Ph.D. degree in electrical and electronic engineering at the ARC Special Research Centre for Ultra-Broadband Information Networks (CUBIN) in the University of Melbourne, Australia.

Her research interests are in fiber-wireless networks, optical access networks, and microwave photonics.

Dalma Novak (S'90–M'91–SM'02–F'07) is a Vice President at Pharad, LLC who are developing advanced antenna and RF over fiber technologies. She received the degrees of B.Eng. degree (electrical) with (first-class hons) and the Ph.D. degree from the University of Queensland, Australia, in 1987 and 1992, respectively.

From 1992–2004 she was a faculty member in the Department of Electrical and Electronic Engineering at The University of Melbourne, Australia and during 2004–2009 was a Professorial Fellow in the same Department. From July 2000 to January 2001 Dr. Novak was a Visiting Researcher in the Department of Electrical Engineering at UCLA, and at the Naval Research Laboratory, Washington, DC. From June 2001–December 2003 she was a Technical Section Lead at Dorsál Networks, Inc. and later at Corvis Corporation. From January–June 2004 she was Professor and Chair of Telecommunications at The University of Melbourne. Dr. Novak's research interests include hybrid fiber radio systems, microwave photonics applications, high speed optical communication systems, wireless communications, and antenna technologies and she has published more than 250 papers in these and related areas, including six book chapters.

Dr. Novak is Chair of the IEEE Photonics Society Technical Committee on Microwave Photonics and the IEEE MTT Society Technical Committee on Microwave Photonics. From 2003–2007 she was an Associate Editor of the IEEE/OSA JOURNAL OF LIGHTWAVE TECHNOLOGY. She is Technical Program Chair for the 2010 IEEE Photonics Society Annual Meeting.

Rod Waterhouse received the B.Eng., M.S., and Ph.D. degrees in electrical engineering from the University of Queensland, Australia, in 1987, 1989 and 1994, respectively.

In 1994 he joined RMIT University as a lecturer, become a Senior Lecturer in 1997 and an Associate Professor in 2002. From 2001–2003, he was with the venture-backed Dorsal Networks which was later acquired by Corvis Corporation. In 2004 he co-founded Pharad, an antenna and wireless communications company, where he is now Vice President. From 2003–2008 he was appointed as a Senior Fellow within the Department of Electrical and Electronic Engineering at the University of Melbourne. His research interests include antennas, electromagnetics and microwave photonics engineering. He has over 260 publications in these fields, including 2 books and 4 book chapters.

Dr. Waterhouse is an Associate Editor for the IEEE TRANSACTIONS ON ANTENNAS AND PROPAGATIONS and he is also a member of the Editorial Board for IET Microwaves, Antennas and Propagation. He chaired the IEEE Victorian MTTS/APS Chapter from 1998–2001 and in 2000 received an IEEE Third Millennium Medal for Outstanding Achievements and Contributions.

IEEE Proof
Print Version