9th AUSTRALASIAN
FLUID MECHANICS CONFERENCE,
AUCKLAND, 8-12 DECEMBER 1986

Some Experiences of Environmental Wind Tunnel Testing of Buildings to Comply with City Planning Regulations

P. CARPENTER, P. D. CENEK and N. J. JAMIESON

Central Laboratories, Ministry of Works and Development, Lower Hutt, New Zealand.

ABSTRACT

Wellington City has adopted town planning regulations which include specific performance criteria for wind conditions in the streets around proposed multi-storey developments in the central city. These planning requirements are believed to be among the most stringent of any city in the world. The developers are required to commission a wind tunnel test of their proposal, which must demonstrate that the maximum gust speeds around the development do not exceed certain specified values. Hence the wind regulations place a demand on wind tunnel operators that their test results be reliable.

This paper describes some of the authors' experiences with performing these wind tunnel tests.

INTRODUCTION

This paper presents in broad terms some of the experiences of Central Laboratories, Ministry of Works and Development, of performing wind tunnel testing for new building developments to evaluate their effects on the local wind environment. There has been considerable use made of this facility by property developers in Wellington during the last 4 years or so. This has been largely brought about by the adoption of specific city planning regulations by the local authorities with regard to acceptable wind conditions in the city streets.

The city of Wellington is undergoing a period of considerable redevelopment, and consequently the number of new buildings tested at Central Laboratories for environmental wind effects in Wellington is presently averaging over 20 per year. The authors have therefore obtained substantial experience of performing this type of wind tunnel test in the last few years. Of the various test methods which are available, a combination of two techniques involving wind erosion tests and wind speed measurements has been adopted to provide the optimum test procedure.

After initial testing a developer is sometimes distressed to find that his original design causes a substantial deterioration in the local wind conditions, and he has therefore to consider the ways in which the conditions can be improved. The available options then range from minimal landscaping alterations to doing a complete re-design. The experience of the authors in the past was that many new buildings made the local wind conditions worse to a greater or lesser extent. Hence there was a gradual deterioration in the city, which was already notorious for its windy weather. The planning regulations have helped to slow this trend. Occasionally a proposed building has been completely re-designed with the assistance of wind tunnel consultants. The architects have always been advised to consider the wind effects in their original designs and increasingly they are being obliged to do so.

WELLINGTON WIND REGULATIONS

The city of Wellington is notoriously windy, and therefore the local authorities have adopted a set of specific requirements concerning the influence of new buildings on the wind conditions around them. These regulations are probably among the most stringent adopted by any city authority in the world. The developers of any sizable building are required to commission a wind tunnel test, specifically to determine its effect on the environmental wind conditions. The performance criteria are based on the concept of an annual maximum gust speed, which is an approach which is described by Melbourne (1978). The Wellington performance criteria include the requirements that maximum annual 3-second gust speeds in public areas must not exceed 18 m/s, and also must not be increased to more than 15 m/s by a new development; refer Wellington City District Scheme (1985).

These figures were chosen because they are at about the level of published criteria which are generally considered acceptable for pedestrian comfort and safety in city streets worldwide, and also they are typical of the gust speeds for Wellington which are measured in the wind tunnel. Wind speed criteria have been discussed by numerous authors, e.g. Murakami (1981), Jackson (1977), Lawson (1973). The city planners argued that the criteria needed to be set at this level in order to compel developers to give greater consideration to the effects of their buildings on the wind environment. Consequently, nearly all proposed new office buildings (and also most of the old ones) have locations around them where the wind speeds predicted by wind tunnel tests are on or above the specified limits.

Presently, while numerous measurements of wind speeds in Wellington have been performed in the wind tunnel using established techniques, comparatively little data is available from actual wind measurements in the streets during windy conditions. A programme to obtain full-scale measurements during suitable weather conditions is currently in progress. The limited information that is available now suggests that the wind speeds predicted in the wind tunnel are basically about right.

The wind requirements were made part of the local authority regulations, despite opposition from many developers who believed that the specific requirements would unnecessarily delay their buildings and/or add to costs. The various typical comments reported by the city planners included: (a) "Wellington is a notably windy place and there is nothing that can be done about it." (b) "One just has to accept that occasionally one will be discomforted by the wind." (c) "The causes and effects of wind annoyance are pretty obvious and don't really merit much attention." There was apparently little acceptance that wind conditions around a new building could have much influence on its profitability, despite the fact that some existing office buildings are known to have bad reputations for unpleasant winds, particularly among their occupants.

Proposed buildings which do not comply with the wind regulations may require substantial modifications to the design, or the development may even be cancelled, although to the authors' knowledge there have been no such cancellations so far. Therefore there is considerable demand placed on wind tunnel operators for their test results to be accurate, and the operator needs to clearly state the reliability and the significance of his test results.

It is the experience of the authors that many developers, on seeing the wind tunnel tests in progress, may initially be sceptical about the validity of the test results because of the apparent small size of the model. Hopefully, the future availability of additional full-scale wind measurements for comparison with the wind tunnel results should help to convince them of the value of the tests.

THE WIND TUNNEL AND TEST PROCEDURES

The Central Laboratories wind tunnel is of the open circuit type: a diagram of it is shown in Figure 1. The overal length is 68 m, with a working section 2.75 m wide x 1.22 m high x 37 m long. The variable pitch fan is 1.52 m in diameter, with a 36 kW motor. Maximum speed in the working section is 13 m/s.

Various turbulence generators and roughness elements are used to simulate the atmospheric boundary layer for a city centre. The velocity profile, turbulence intensity profile, and longitudinal turbulence spectrum are all measured and adjusted to match the appropriate model scale.

The city models are mainly built out of expanded polystyrene for lightness and simplicity of construction. The ideal scale is about 1:250 for a city like Wellington, in which new buildings are typically between 10 and 20 storeys high.

Two main methods are used to determine the wind conditions at street level. Firstly, wind erosion using small particles on the surface of the model, and secondly, speed measurements using a hot-wire anemometer.

For the erosion tests, expanded polystyrene beads of about 1 mm diameter are used, which successfully provide a variety of information about the wind conditions. The beads are spread over the surface of the model, and are progressively blown away from the windiest areas as the wind tunnel speed is slowly increased. The movement of the beads is photographed to record the relative windiness of the locations within the area being tested. The beads are also sufficiently light that they can swirl about in the airflow and hence show the detailed wind flow patterns. Therefore they indicate various features such as the wind direction, turbulence, corner flows, downwash, reverse flow, vortices, and other 3-dimensional effects. Such features must be observed and noted during the testing, or else videotaped, as they are not visible in still photographs. At the end of a test, the beads can be conveniently vacuumed up for re-use.

The bead erosion tests provide a valuable overview of the overall wind pattern on the surface of the model, combined with the various detailed effects. In many situations the flow patterns can be reasonably well predicted prior to testing, but occasionally some completely unexpected effects may occur, and these are readily highlighted by the beads. It is possible to obtain a crude estimate of wind speeds on the model by studying the erosion patterns, but this is usually not sufficiently accurate, and so detailed speed measurements are also required.

The speed measurements are performed using a hot-wire anemometer linked to a mini-computer. Various statistical data such as the mean speed, root-mean-square, maximum gust, etc, are obtained from the analysis for each location, but it is usually only necessary to report the estimated annual maximum 3-second gust speed. This single value provides an adequate indication of the overall level of windiness at the site throughout the year. It is generally preferable to keep the results presented in a simple way, so that only a single numerical value is used to describe the wind speed. Typically, wind speeds at about 10 locations around the site are measured, at positions indicated by the preceding bead tests. Four wind directions are usually tested, comparing the old buildings or bare site with the new development on the site. Hence about 80 separate wind speed measurements may be required for a thorough test. The predicted speeds are usually repeatable to within 5 to 10 percent.

The combination of bead erosion tests and hot-wire speed measurements has been found to provide a very satisfactory range of testing which is sufficiently flexible to enable detailed study of any unusual or unexpected wind flow phenomena. However, there are still areas in which there is potential to improve on the current test procedure. These should include the accuracy and repeatability of the measured wind speeds, and also a convenient method for photographically recording local wind flows.

CONSEQUENCES OF THE WIND REGULATIONS

The reasons why an exposed isolated building can cause unpleasant windy conditions around its base have been generally well documented by various wind tunnel researchers, e.g. by Gandemer (1975) and Beranek (1984): these effects are not the subject of this paper. However, the wind effects have not always in the past been well understood by architects, or if they have, they may have chosen to neglect good wind design principles where these conflicted with other design requirements for a building. Generally, more work is required to provide information on this subject to architects, such as the wind design guide booklet published by Wellington City Council (1984). The flow conditions in the streets between irregular groups of buildings are not so well understood, and therefore wind tunnel testing is necessary.

Probably the main impact of the new wind regulations has been to make architects and developers much more aware and concerned about the effects that large buildings have on the local wind environment. Consequently, this awareness is now being reflected in the initial design of some buildings, where the architect may be able to point out design features which specifically attempt to keep wind speeds to a minimum. However, it is fair to say that wind considerations are usually overshadowed by basic economic requirements such as building floor area, and numerous other planning regulations.

It has been the aim of the planners (and the authors) to try to persuade developers to commission wind tunnel testing at the very beginning of a development project, or at least seek advice on the wind conditions near the site, in order that the basic shape of the building be influenced by wind considerations where appropriate. This has generally been resisted by the developers, and consequently the building is usually not wind tunnel tested until after the sketch plans of the design have been completed and the overall shape of the development is fixed in the architects mind.

The purpose of wind tunnel testing consequently becomes mainly to determine whether a building satisfies the planning requirements, rather than to improve the basic design. In cases where the design is not satisfactory, the architect usually then seeks to make detail improvements rather than wholesale changes. The wind tunnel can therefore be used to locate features such as fences, screens, and planters at ground level, or verandahs and canopies to shield from downwash. These various devices can be very effective in improving wind conditions.

Sometimes it can be appropriate to substantially change the design of a building. A sketch of one such example is shown in Figure 2. The first drawing shows the original design, which was for a six storey rectangular building near a street corner, to replace some low houses on the site. This design caused a substantial deterioration of the local wind environment, particularly around the windward corners. As testing progressed, it became clear that this basic design was not satisfactory. Several different designs were therefore wind tunnel tested, and the building which was subsequently constructed is shown in the second drawing. It incorporatorates several features intended to reduce ground-level wind speeds: (a) there is a two-storey podium, enabling the main part of the block to be moved away from the street corner. (b) the corners of the block are bevelled to encourage the wind to blow around it, rather than down to street level. (c) the flow around the side of the block is confined to the roof of the podium. (d) the corners of the podium are bevelled to prevent sudden wind speed changes at the corners. (e) some protective fences (not shown) were also included in the design. The tower and podium design is taller than the original, so that the available floor space is about the same. Fortunately, the final building was also generally considered to be more aesthetically pleasing than the original design, and the clients were satisfied with the result.

Generally, in the past, the effect of the considerable redevelopment in the city was to steadily make the streets of Wellington windier. However, since the adoption of the revised city wind regulations, there has been a noticeable slowing of this trend. Within the last year, the new developments tested have typically caused little change to the overall wind environment. This improvement has been due to a combination of the architects being more aware of the potential problems, and also some buildings being modified to reduce the surrounding wind speeds during the course of wind tunnel testing.

There is still substantial resistance among developers to the specific nature of the Wellington wind regulations. However, they generally seem to be prepared to adapt to the regulations and work within them. Certainly there has been no loss of apparent enthusiasm for demolishing old Wellington city and rebuilding it. The opinion of the authors when the new regulations were first adopted was that the limits on acceptable wind speeds had been set at an unworkably low level, and that wind tunnel tests could not be performed sufficiently to the required detail and accuracy. This concern has generally not been realised, and the procedure now functions reasonably well.

WIND MEASUREMENTS IN WELLINGTON

A programme of full-scale wind measurements is presently in progress to obtain data to validate the wind tunnel results, although the amount of full-scale data currently available is considerably less than the amount of wind tunnel test results.

A fairly adhoc set of wind speed measurements have been performed in Wellington streets using Gill cup anemometers, set up on various occasions when the weather was suitably windy over a period of about a year. Currently, some 20 hours of recordings have been obtained (to June 1986). The highest gust speed measured has been 29 m/s, which was reduced to 23 m/s when the signal was passed through a 3-second low pass filter. The highest 10-minute mean wind speed recorded was 13 m/s.

On one occasion while the wind was being recorded, an elderly man walking on the footpath just opposite the anemometer was blown off his feet and rolled into the road. Fortunately there was no traffic passing at the time. The gust which caused this is shown plotted (unfiltered) in Figure 3. The shown plotted (unfiltered) in Figure 3. The measured peak is 25 m/s, which reduces to 18 m/s when passed through a 3-second filter. It can be seen that there was a virtually instantaneous increase in wind speed of about 20 m/s which was experienced immediately after something of a lull. The cup anemometer took about half a second to respond to the gust.

This type of very sudden wind gust is certainly not unusual, although it had a most dramatic effect at the time. It confirms the authors' opinion that sudden unexpected gusts are the most hazardous wind effects for pedestrians to experience. Therefore it is appropriate to use gust wind speeds as a measure for acceptability criteria for wind in pedestrian areas.

There is insufficient data presently available to be able to do a detailed comparison between model and full-scale measurements. There is also substantial scatter in the full-scale results which is partly due to the lack of an ideal reference wind speed recorder. Reference wind speeds are obtained from the two local weather offices, neither of which is particularly well sited to determine the central city wind conditions.

It can reasonably be stated from the full-scale measurements that the typical highest hourly 3-second gust speeds obtained during gale-force weather conditions are about the same as the annual maximum 3-second gust predicted by wind tunnel tests. Hence the true maximum annual gust is probably somewhat higher. It may become necessary to modify the predicted wind speeds when additional full-scale data becomes available, but at this stage it is not anticipated that any adjustment need be large.

CONCLUSIONS

A refined method of wind tunnel testing is being used successfully to determine city street-level wind conditions, and to modify new building designs where necessary in order to reduce local wind speeds. The adoption of stringent planning regulations in Wellington has caused a noticeable improvement in the design of new buildings, both by forcing some designs to be modified with the assistance of wind tunnel tests, and also by making architects more aware of wind effects.

REFERENCES

Beranek, W.J. (1984): Wind Environment Around Single Buildings of Rectangular Shape, and Wind Environment Around Building Configurations. Heron, vol 29, 1984, No. 1, Delft.

Gandemer, J. (1975): Wind Environment Around Buildings: Aerodynamic Concepts. Proc 4th International Conference on Wind Effects on Buildings and Structures, 1975.

Jackson, P.S. (1977): The Evaluation of Windy Environments. Central Laboratories Report 3-77/4, MWD, New Zealand.

Lawson, T.V. (1973): The Wind Environment of Buildings: A Logical Approach to the Establishment of Criteria. Report TVL 7321, 1973, Univeristy of Bristol.

Melbourne, W.H. (1978): Criteria for Environmental Wind Conditions. Journal of Industrial Aerodynamics, Vol 3, 1978, Nos. 2,3.

Murakami, S; Deguchi, K. (1981): New Criteria for Wind Effects on Pedestrians. Journal of Wind Engineering and Industrial Aerodynamics, Vol 7, 1981, No. 3.

Wellington City Council (1984): Wind, a Design Guide for the Wellington City Centre.

Wellington City Council (1985): Wellington City District Scheme.

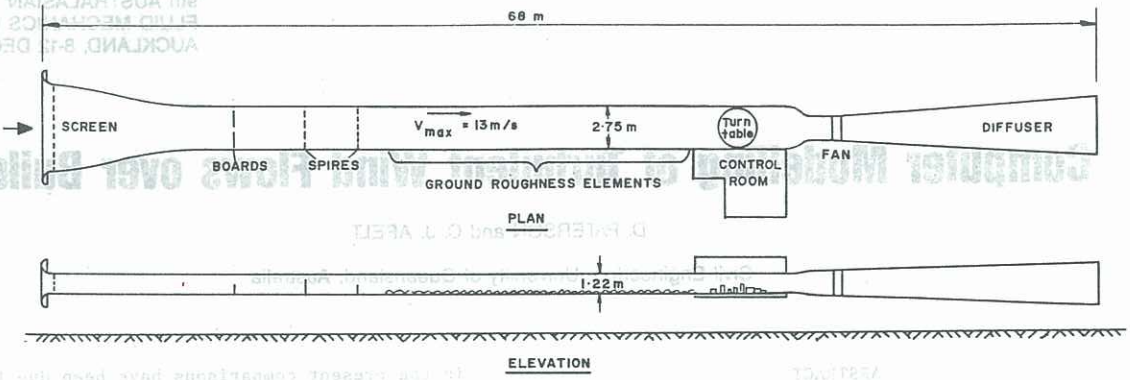

Figure 1: MWD Central Laboratories Wind Tunnel

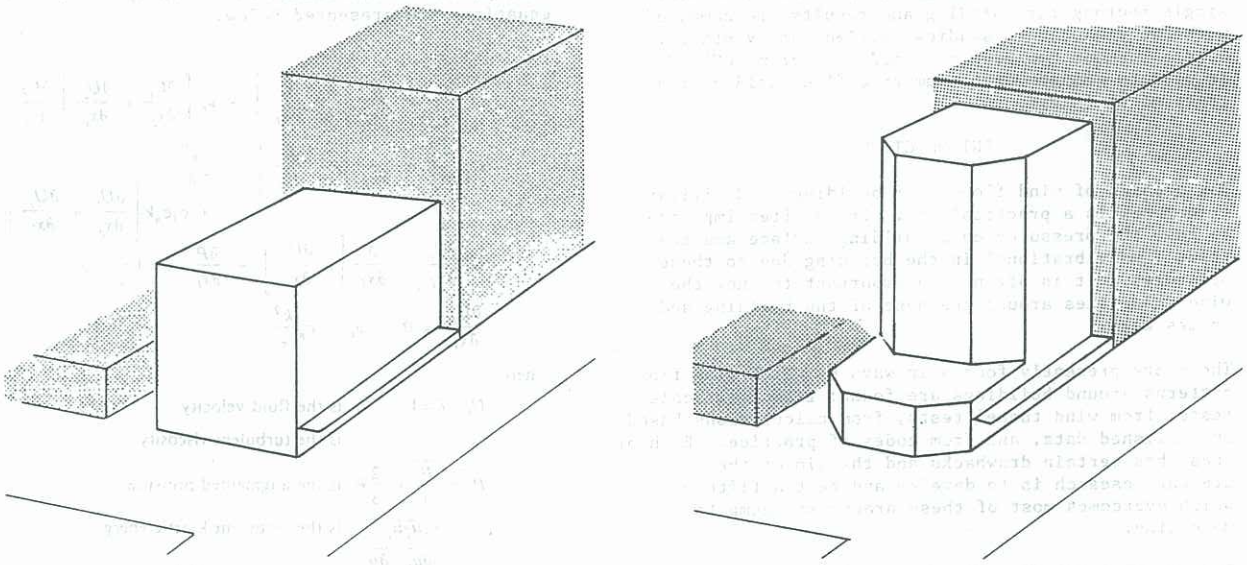

(a) Original Design (b) Final Design

Figure 2: Example of Building Design Change Achieved with the Aid of Wind Tunnel Testing

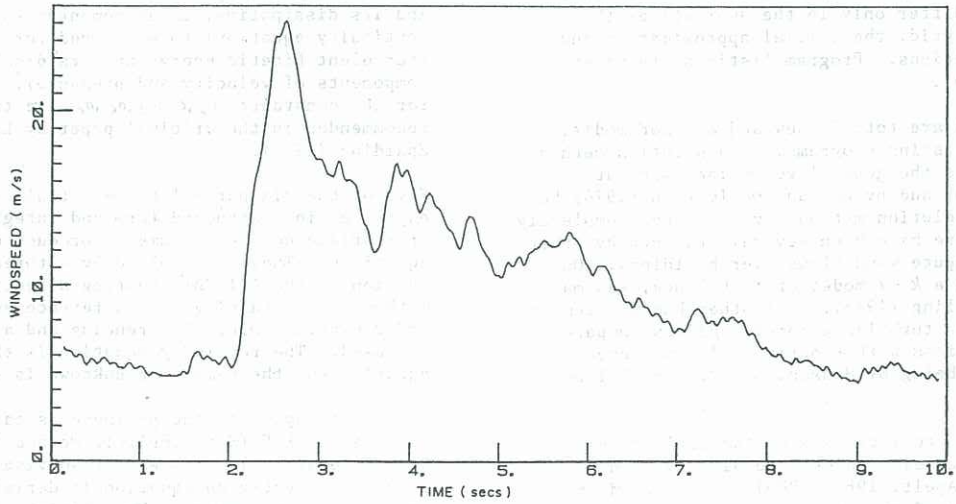

Figure 3: Example of Recorded Severe Wind Gust