FOURTH AUSTRALASIAN CONFERENCE
on
HYDRAULICS AND FLUID MECHANICS
at
Monash University, Melbourne, Australia
1971 November 29 to December 3

INVESTIGATIONS OF CAVITATION DAMAGE IN A ROTATING DISC

by
B.C. Syamala Rao, D.V. Chandrasekhara and K. Seetharamiah

S U M M A R Y

This paper is concerned with cavitation occurring behind circular cylinders in a rotating disc. The effects of velocity on cavitation damage and length of cavity are reported for a velocity range of 25-45.7 m/sec. at three values of pressures. Cavitating bodies of diameters of 0.95 cm and 1.90 cm have been used. Variation of normalized length of cavity and weight loss with cavitation parameter σ are studied. $1/d - \sigma$ variation is linear for values of σ higher than 0.26 and $1/d$ increases rapidly with decreases in σ. This critical σ is independent of the diameter of the cavitating body. Further $1/d$ for a given value of σ decreases with diameter. A study of weight loss variation with velocity reveals the presence of a severe damage zone, between two zones of comparatively lower damage. The values of exponent n in the relation $\Delta W \propto V^n$ are 4-12 in the low velocity region, 100-150 in the critical region and 5-9 in the high velocity region. In the relationship $\Delta W \propto (V-V_o)^n$, where V_o is a threshold velocity, the values of n in the corresponding regions are 1-2, 21 and 1-4 respectively.

B.C. Syamala Rao, Lecturer
D.V. Chandrasekhara, Research Scholar
K. Seetharamiah, Professor
Dept. of Civil and Hydr. Engrg. Indian Institute of Science, Bangalore-12, India.

INTRODUCTION

Cavitation is a hydrodynamic phenomenon whose undesirable effects have been experienced in many engineering disciplines such as hydraulic machines, civil and marine engineering structures, nuclear reactors, biomedical engineering etc. Cavitation essentially involves the formation of cavities containing liquid vapour and/or air/gas and the collapse of the cavities, specially on surfaces of engineering materials. Investigations on the various aspects including bubble dynamics, inception and mechanics, damage, effect of hydrodynamic factors are being carried out in several major laboratories for arriving at a reasonable understanding of the phenomenon and for developing methods to prevent and control the undesirable effects.

Many experimental devices, such as the water tunnel, two-dimensional venturi magnetostriction oscillator, barium titanate ring, rotating disc (1,2) have been used by researchers for cavitation investigations. Amongst these devices the rotating disc offers a simple method for studying cavitation damage on metal specimens under different hydro-dynamic conditions and using different materials(3, 4,5). Further the results of experiments with a rotating disc are specially useful in the analyses of cavitation in rotary machines.

In spite of the simplicity of the rotating disc equipment, there have been relatively a few investigations reported, wherein this equipment has been used. The results that have been so far presented do not conform to any definite pattern, mainly due to the insufficiency of data and lack of proper parameters for good correlations. The present investigations have been undertaken to obtain more data on the effect of hydrodynamic factors on cavitation damage behind circular cylinders, to suggest new parameters for correlation and to compare the results with similar investigations from a two-dimensional venturi.

EXPERIMENTAL EQUIPMENT AND TEST CONDITIONS

The rotating disc equipment, Fig.1, consists of a cast iron chamber in which a metallic disc rotates. The disc is connected to a 26 KW, 2900 r.p.m. motor. The chamber is provided with eight radial baffles spaced at equiangular intervals on either side of the disc to prevent circulation of water contained in the chamber. The clear distance from the disc to the front and rear baffles is 1.05 cm and 0.51 cm respectively. The disc consists of a 3.17 mm thick aluminium face sheet over a 1.59 mm thick mild steel base sheet, with cutouts for inserting rectangular or circular specimens. Brass circular cylinders of height 3.17 mm are screwed to the aluminium face sheet at varying distances from the centre, to obtain the desired velocities.

The relative velocity of flow past the cavitating bodies is obtained by the simple formula $V = 300\ r$ where r is the radial distance of the centre of the body from the centre of the disc. Pressure in the chamber was measured by a U-tube mercury manometer. All weights, initial as well as those at various time intervals, were measured to an accuracy of 0.1 mg by a 'Mettler' balance of capacity 200 gm. Aluminium specimens of thickness 3.17 mm were neatly prepared from a sheet free from scratches and other defects. Prior to all weight measurements, the specimens were washed with soap and dried in a hair drier and kept in a desiccator for several hours.

Velocity range for this study was 25.0-45.7 m/sec. Experiments were conducted for two diameters d of the cavitating body, namely 0.95 cm and 1.90 cm and at three values of chamber pressures, 1.48, 1.34 and, 1.19 kgm/cm^2. To cover the velocity range, four discs two each of diameters 33 cm and 38.1 cm were used. The temperature in the chamber was 38°C ± 2°C. The length of cavity was measured from the upstream stagnation point of the cavitating body to the downstream stagnation point which approximately coincided with the point of maximum depth of damage on the specimen.

The rotating disc equipment suffers from certain limitations. The mean velocity at the centre of the cavitating body has been used for analysis. The variation of velocity across the diameter of the body introduces effects on the phenomenon of uncertain nature. The effects of the movement of the water introduced for maintaining temperature at a constant value are not known. The influence of boundary layers on the body and the disc has not been evaluated.

EXPERIMENTAL RESULTS

The most important single parameter used in cavitation studies is the cavitation parameter, defined as $\sigma = (p-p_v)/\frac{1}{2}\rho V^2$, where p is the chamber pressure, p_v is the vapour pressure and V is the relative velocity between the disc and the liquid surrounding the disc in the chamber. The length of the cavity normalized with respect to the diameter of the cavitating body is plotted against σ in Fig.2. Logarithm of the weight loss ΔW, ($\log \Delta W$) is plotted against $\log \sigma$ in Fig.3 and $\log \Delta W$ against $\log V$ in Fig.4 for both diameters of the cavitating body.

Test durations at which weight losses were chosen for presentation of experimental data are different for different series of experiments, so that the weight losses due to damage were of comparable magnitude in the different series of experiments. The maximum attainable depth of damage was equivalent to the thickness of the specimen. Test times at which this maximum depth occurred on any one specimen were much lower in the case of the disc of diameter 38.1 cm (velocity range, 37.5-45.7 m/sec) than with the disc of diameter 33 cm (velocity range, 25.0 - 38.7 m/sec). Shorter test times have been chosen for analysis. For the smaller disc at these times, linear interpolation of experimental data was used to obtain weight losses for the velocity range 25.0 - 38.7 m/sec from the corresponding weight loss-time curves. This assumption of linear interpolation results in only small errors since the weight losses are small.

It has been reported by several investigators(6,7) that a threshold velocity exists for the onset of cavitation damage. Experimental data showed that for tests at a velocity of 25 m/sec very little damage occurred. This velocity was taken as the threshold velocity, V_o. This threshold velocity is different from incipient velocity, the latter being defined as the velocity for a given pressure at which bubbles filled with gas and/or liquid vapour are formed on the surface of the cavitating body. Using a value of 25 m/sec for V_o, $\log \Delta W$ is plotted against $\log (V-V_o)$ in Fig.5.

In order to investigate the possible limitations of the results obtained from the analysis according to the procedure explained in the preceeding paragraphs, an alternate analysis following a different procedure was adopted. In this analysis, the rate of weight loss at an advanced stage of erosion, generally termed as the steady-state zone, was chosen. A total weight loss of 100 mg($\Delta W'$) was chosen and the test times (T) for this weight loss under different test conditions was determined from weight loss-time curves. Interpolation was possible for T-determination for most of the velocities in the range 37.5-45.7 m/sec. The maximum weight losses in the velocity range 25.0-37.5 m/sec was less than 100 mg and extrapolation was resorted to in this range. Fig. 6 presents a plot of $\log \Delta W'/T$ against $\log V$.

ANALYSIS OF EXPERIMENTAL RESULTS

The $1/d$-σ plot (Fig.2) shows that for large values of σ, the relationship is more or less linear but at smaller values of σ, which normally signify more intense cavitation, 1/d increases rapidly. The value of σ at which this change in $1/d$-σ relationship occurs is 0.26 for both 0.95 cm and 1.90 cm diameter bodies. Further 1/d decreases with increase in diameter of the cavitating body. The results of a similar study of $1/d$-σ variation in a two-dimensional venturi, obtained for a σ-range of 0.60-1.65 indicated that for $\sigma > 1.50$, the relationship between 1/d and σ was linear, but for $\sigma < 1.5$ for 1.90 cm body and $\sigma < 1.2$ for 0.95 cm body, 1/d increased rapidly with decreases in σ. It is surmised that the limitations of the rotating disc equipment set forth earlier as well as the incompletely established two-dimensionality of flow are responsible for this difference in the behaviour of 1/d with σ in the two experimental arrangements.

Weight loss-velocity plots* show that the weight losses are small for $V < 37$ m/sec for 0.95 cm dia body and for $V < 33$ m/sec for 1.90 cm dia body, but increase rapidly with further increase in velocity. When experimental data are considered in the velocity range 25.0-37.2 m/sec, peaks in damage are observed at some velocities in the range 32.6-36.6 m/sec. However when the velocity

*These plots are not presented here but can be drawn from data presented in Fig.4

range 25.0-45.7 m/sec is considered, the earlier observed peaks are inconsequential and there is no indication of a peak damage, in spite of some scatter of experimental data. The rates of weight losses at different pressure conditions do not show any definite trend, within the range of the experimental work reported here. One major reason for scatter of data and inconsistency of rate of weight loss variation with time is that damage depends considerably on the properties of the specimen material. Obviously the assumptions of homogeneity and isotropism are not realised in practice. Further aluminium is in reality subjected to two types of failure, ductile and brittle failure, when exposed to the cavitation phenomenon. While both the types are the result of plastic deformation, ductile failure is accompanied by little weight loss while brittle failure results in the removal of material. The conjecture of the authors is that under a given hydrodynamic condition, both failures occur simultaneously as well as sequentially in a random manner. The interaction between ductile and brittle failure then causes peaks in rate of weight loss-time curves and also scatter in weight loss data.

From the plot of log ΔW versus log σ, Fig.3, the values of the exponent, n when a relationship of the type $\Delta W \propto \sigma^n$ is considered, are obtained. Fig. 3 shows that the exponent n on either side of a critical zone (where severe damage occurs) is of the same order of magnitude. The values of n are 1-5 for high values of σ, 21-31 in the critical zone and 1 for low values of σ. The values of n in the three zones are the average ones for the three pressures investigated in the present study. Averaging is considered reasonable due to the following reasons. (i) For the three pressures investigated the log ΔW-log σ plot does not follow any definite pattern. (ii) The values of n are only approximate. The limits of the critical zone can be easily obtained from Fig. 3.

Several investigators have suggested a power relationship of the form $\Delta W \propto V^n$ between weight loss and velocity. Knapp (8,9) suggested a value of 6 for the exponent n. A linear variation of ΔW with V was reported by Rasmussen (10) and Plesset (11). Hammitt (12) suggested that erosion varied with different exponents in different regions from tests in a venturi and this was confirmed by Wood et al (4) and Rao et al (5). From the log ΔW-log V plot for the test results in the present study, Fig.4, the values of n, averaged for the three pressures, in the three zones were obtained and are 4-12 in the low velocity region, 100-150 in the critical region and 5-9 in the high velocity region.

When correlations of the type $\Delta W \propto e^{nV}$ are considered, the plot of log ΔW versus V also reveals the existence of a critical zone. The values of n for both the bodies lie in the range 0.1-0.3 in the low velocity region, 1.5-2.5 in the critical zone and 0.1-0.2 in the high velocity region. Thus both power and exponential relations for ΔW with V give similar results in the range of velocities considered in this investigation.

Evaluation of exponents n in the relationship $\Delta W \propto (V-V_o)^n$, Fig.5, has been made. The values of n are 1-2 in the low velocity region, 21 in the critical region and 1-4 in the high velocity region.

In the alternate analysis made using the rate of weight loss data, the exponent n in the relation $\Delta W'/T \propto V^n$ has the values of 5-9 in the low velocity region, 54-66 in the critical zone and 7-9 in the high velocity region.

A scrutiny of the values of the exponent in a power relation between damage and velocity shows that the exponent is not affected by variations in pressure and test times reported in this paper. Further it is noted that the values of n for the correlations $\Delta W \propto V^n$ and $\Delta W'/T \propto V^n$ lie in the ranges 4-12 and 5-9 and hence are comparable in magnitude. Detailed investigations are being carried out to determine the effect, if any, of test time on the values of the exponent.

CONCLUSIONS

1. The normalized length of cavity varies linearly with cavitation parameter for $\sigma > 0.26$, but for $\sigma < 0.26$, 1/d increases rapidly. 1/d has lower values for 1.90 cm dia body as compared with those for 0.95 cm body.

2. The experimental data of weight loss variation with velocity reveal the presence of a critical zone where severe damage occurs, between two zones of comparatively lower damage.

3. The values of exponent n in the relation $\Delta W \alpha V^n$ are4-12 in the low velocity region, 100-150 in the critical region and5-9 in the high velocity region. In the relationship $\Delta W \alpha (V-V_o)^n$, the values of n in the corresponding regions are 1-2, 21 and 1-4 respectively.

4. Within the velocity range considered in this investigation, both power and exponential relationships for variation of weight loss with velocity yield somewhat identical qualitative correlations.

5. The values of exponent n for the correlations $\Delta W \propto V^n$ and $\Delta W'/T \propto V^n$ are comparable in magnitude.

REFERENCES

1. Knapp, R.T., Daily, J.N., and Hammitt, F.G., "Cavitation", Engineering Societies Manographs, McGraw-Hill, New York, 1970.

2. Eisenberg, P., "Cavitation", Handbook of Fluid Dynamics, ed., Streeter,V.L., McGraw-Hill, New York, 1961, Section 12-I.

3. Canavelis, R., "Effects of Velocity and Static Pressure on Cavitation Damage", Electricite de France, HC/061-230/11, November 1967.

4. Wood, G.M., Knudsen, L.K., and Hammitt, F.G., "Cavitation Damage Studies with Rotating Disk in Water", Journal of Basic Engineering, Trans.ASME, Series D, Vol. 89, March 1967, pp. 98-110.

5. Syamala Rao, B.C., Lakshmana Rao, N.S., and Seetharamiah, K., "Cavitation Erosion Studies with Venturi and Rotating Disc in Water," Journal of Basic Engineering, Trans. ASME, Vol.92D, No.3, September, 1970, pp. 563-579.

6. Varga, J., and Sebastyen, G., "Observations on Pitting Velocity Exponent in Flow Systems," Periodica Polytechnica, Mechanical Engineering, Vol.8, No.3, 1964, pp. 343-352.

7. Nowotny, H., "Werkstoff zerstorung durch Kavitation", V.D.I.- Verlag Gimbh, Berlin, 1942. English Translation as ORA Report No. 03424-15-I, Nuclear Engineering Department, University of Michigan, Ann Arbor, Michigan, June 1962.

8. Knapp, R.T., "Recent Investigations of the Mechanics of Cavitation Damage," Trans. ASME, Vol. 77, 1955, pp 1045-1054.

9. Knapp, R.T., "Accelerated Field Tests of Cavitation Intensity," Trans. ASME, Vol. 80, 1958, pp 91-102.

10. Rasmussen, R.E.H., "Some Experiments on Cavitation Erosion in Water Mixed with Air," Proceedings, Symposium on Cavitation in Hydromechanics, NPL (Teddington), H.M.S.O. Publication, 1955, p.20.

11. Plesset, M.S., "An Experimental Method for Evaluation of Resistance to Cavitation Erosion," Proceedings, IAHR Symposium on Cavitation and Hydraulic Machinery, Sendai, Japan, 1962, pp 87-111.

12. Hammitt, F.G., "Damage to solids caused by Cavitation," Philosophical Transactions of the Royal Society, London, Vol. 1110, 260, Series A, 1966, pp. 245-255.

::

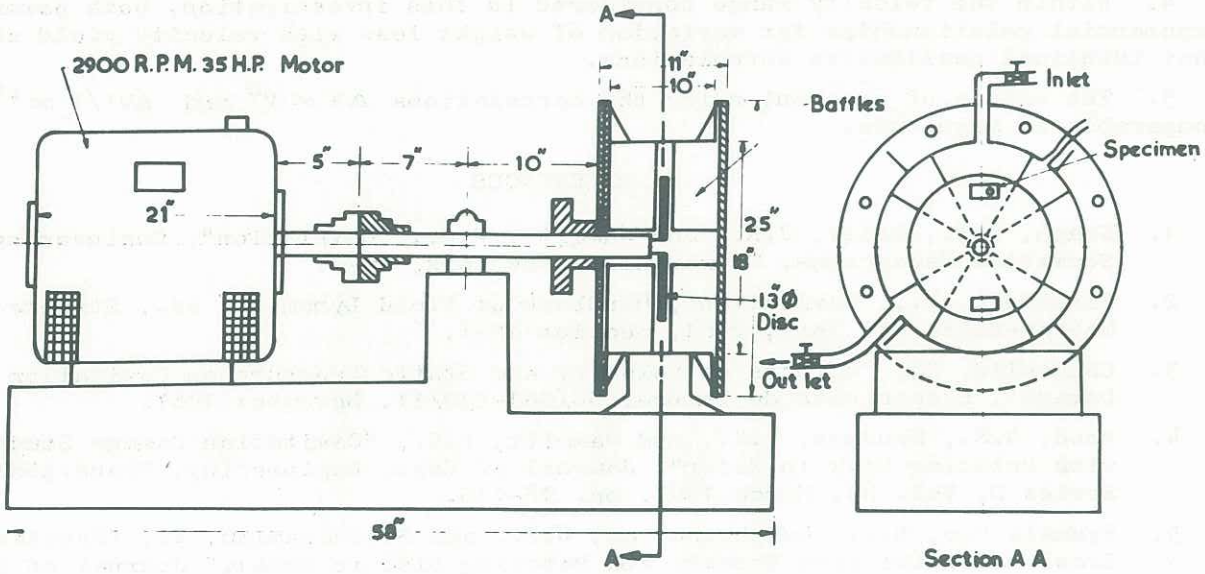

FIG. 1-SECTIONAL VIEWS OF THE ROTATING DISC

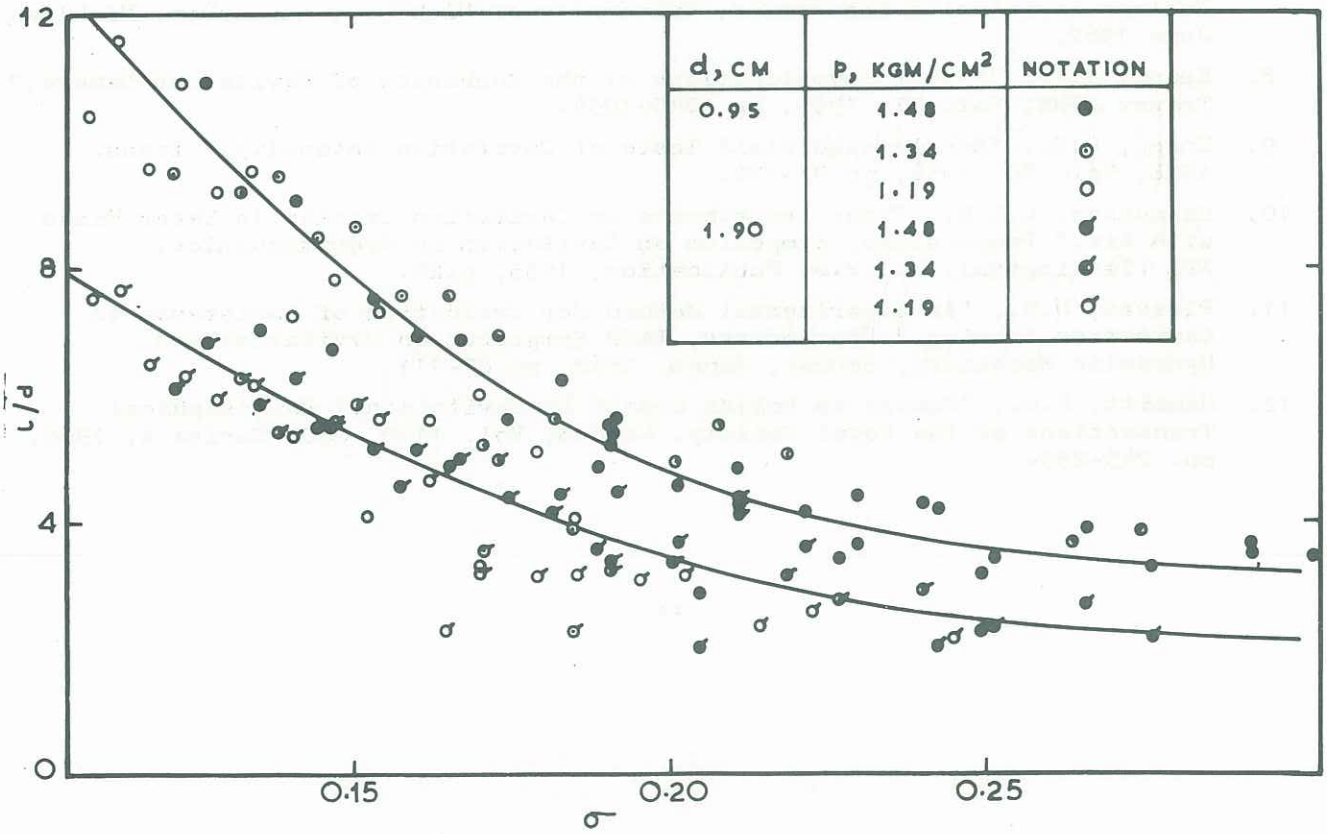

FIG. 2 - RELATIONSHIP BETWEEN l/d AND σ

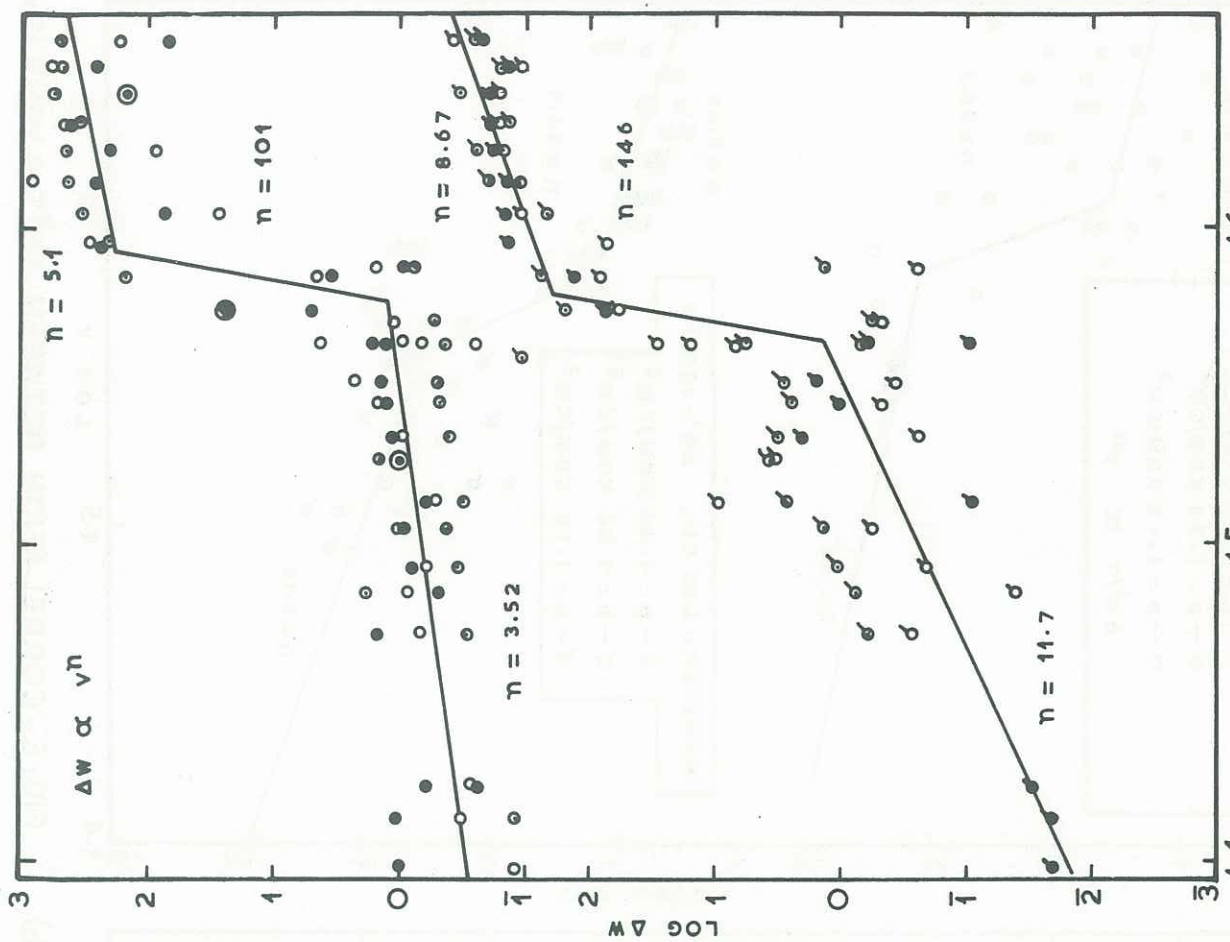

FIG.4 – PLOT OF LOG ΔW Vs LOG V

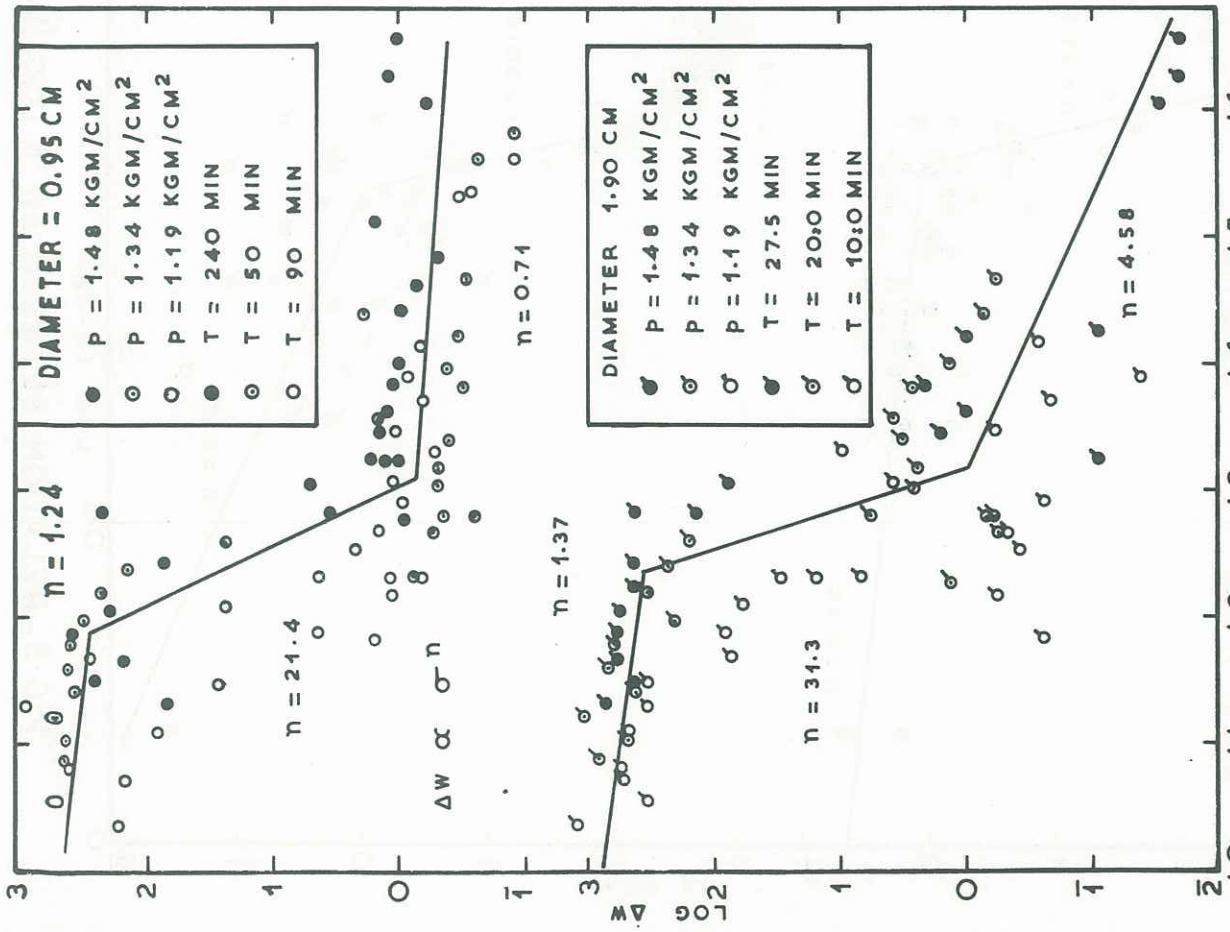

FIG.3 – CORRELATION BETWEEN ΔW AND σ

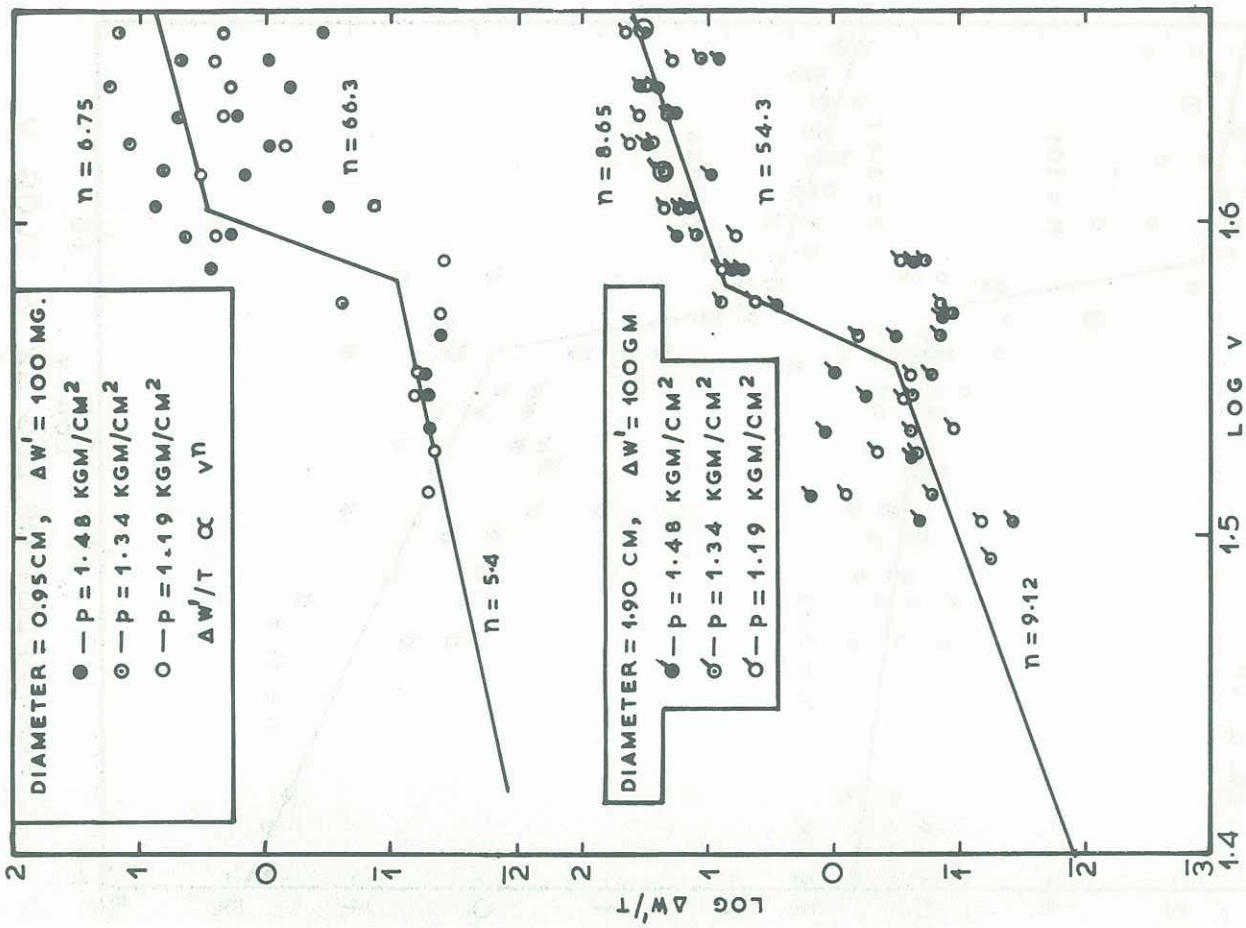

FIG. 6 – CORRELATION BETWEEN ΔW'/T & VELOCITY

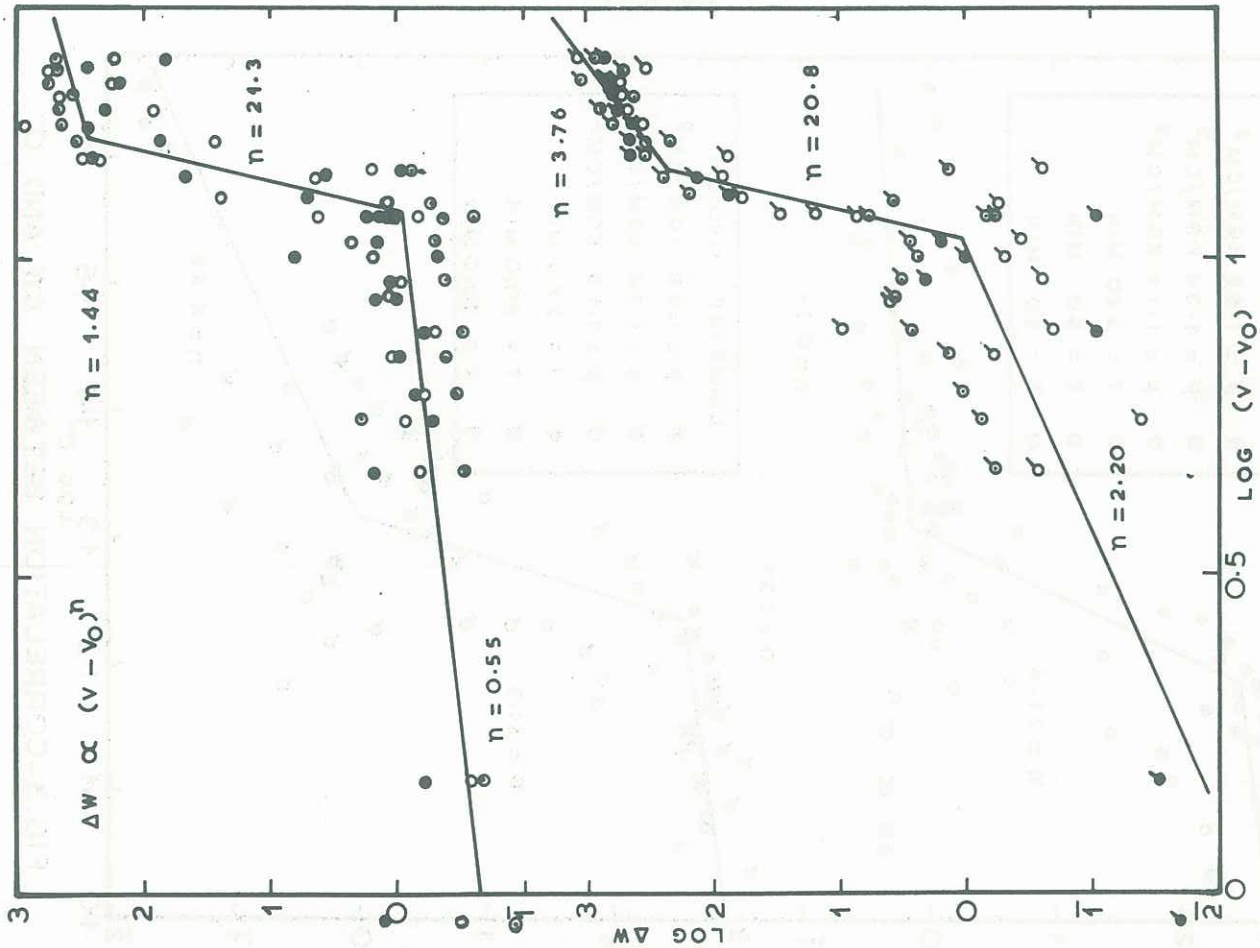

FIG. 5 – RELATION BETWEEN ΔW & LOG (V-V₀)