11th Australasian Fluid Mechanics Conference
University of Tasmania, Hobart, Australia
14-18 December 1992

NUMERICAL STUDIES ON CURTAIN COATING FLOWS WITH A CONTACT SURFACE

Atsushi OKAJIMA[1], Hisanori UENO[1], Takashi YAMADA[1] and Satoshi FUKUI[2]

[1]Dept of Mechanical Systems Engineering, Kanazawa University, Ishikawa 920, JAPAN

[2]Japan Carbide Industry Ltd, Uozo, Toyama Pref, JAPAN

ABSTRACT

A curtain coating flow provides a parameter study to advance fundamental understanding of the physics of flow with a free surface, an interface and a contact surface, and to develop method of numerical computation of such flow at extremely low Reynolds numbers. A liquid issues through a slot of the die, and flows down in a curtain film across a narrow gap onto a fast-moving surface, forming a coating flow over the moving surface. In the present study, we have simulated unsteady, two-dimensional, coating flows of a Newtonia liquid with free surfaces by solving the full Navier-Stokes equations with a finite difference method, the MACRL method. A computed range of the Reynolds number based on an issued velocity and a slot width is from 0.05 to 5.0, and a maximum ratio of velocities of a moving surface and an issued liquid is determined for the given conditions of a gap-distance and a setting angle of an issued flow direction. Results include the effects of the design and operating parameters such as a velocity of the moving surface, a gap-distance and an angle of direction of an issued liquid.

INTRODUCTION

In a manufacturing process of film or wrap-seat, a high viscous liquid is coated on a surface of a stainless-belt which moves with a constant velocity. An increase of belt-velocity contributes to improve the productivity of film or wrap-seat, while air enters between a liquid film and a belt when the value of belt-velocity is over a critical value. Recently, Kistler(1984) numerically simulated coating flows by a finite element method. In this paper, a flow is assumed to be two-dimensional, unsteady, incompressible and of Newtonian-fluid, and we have simulated coating flows with free surfaces at very low Reynolds numbers by a finite difference method in order to examine how air to enter between a belt and a liquid film. One of finite difference method, the MACRL method (Pracht,1971) is applied, and two lines composed by many markers can describe free surfaces. A flow model for the computation is illustrated in Fig.1. The moving belt is inclined with $\alpha = 30^\circ$ for the horizon. Vs is the velocity of the moving belt, D is the gap-distance between the die and the moving surface, and β is the angle of direction of an issued liquid from a slit. We have carried out a series of parameter study of coating flow. The results include the effects of the design and operating parameters such as the Reynolds number Re, the belt-velocity Vs, the gap D and the angle β.

NUMERICAL METHOD

Unsteady, two-dimensional curtain coating flows of a Newtonian liquid are analyzed by solving the full Navier-Stokes equations and the continuity equation with a finite difference method, the MACRL method. The fundamental equations are,

$$\frac{\partial \mathbf{v}}{\partial \mathbf{t}} + \nabla \cdot (\mathbf{v}\,\mathbf{v}) = -\nabla \mathbf{p} + \frac{1}{\mathbf{Re}} \nabla^2 \mathbf{v} + \frac{1}{\mathbf{Fr}^2}\,\mathbf{g}$$

$$\nabla \cdot \mathbf{v} = 0$$

where v is a velocity measured in units of the average velocity of a liquid issued through a slot of a die, U and P is a pressure measured in units of ρU^2, where ρ is the density of liquid. $\mathbf{g}$ is a unit vector of the direction of the gravitational acceleration. ∇ is measured in units of the width of the slot H. D is measured in units of H, and t is a time in units of H/U. $Re \equiv U H/\nu$ is the Reynolds number, where ν is the kinematic viscosity of a liquid.
$Fr \equiv U/\sqrt{gH}$ is the Froude number where g is the gravitational acceleration. On discretizing the Navier-Stokes equations, the convective terms, the pressure terms, and the viscous terms are approximated with the second order centered difference. The convective terms use the explicit scheme, and the pressure terms and the viscous terms use the implicit one. The boundary conditions of free surfaces are given to allow the normal and tangential stresses to vanish. The surface tension is neglected, and no-slip condition is applied over the moving surface.

RESULTS AND DISCUSSION

There are many parameters of design and operation such as a belt-velocity of the moving surface Vs, an angle of an issued liquid β, a gap distance D, which should be specified to define the curtain coating system, and we present

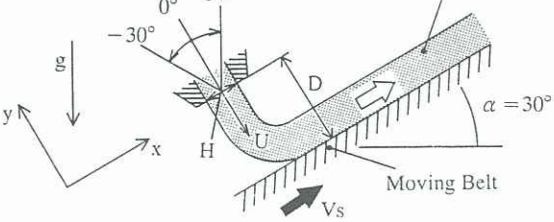

Fig.1 Outline of the computation model

the results of a parameter study of coating flows. A computed range of the Reynolds number Re is from 0.05 to 5.0, and the Froude number Fr remains a constant value, 6.09.

1. Flow patterns at different Reynolds numbers

Fig.2 shows the results of flow patterns at the different Reynolds numbers, Re=(a)5.0, (b)0.5 and (c)0.05 under the conditions of the belt-velocity Vs/U=1.25, 1.23 and the angle $\beta=-30°$. It is noted that the flow patterns all are stationary and strongly depend on the Reynolds number. At the high Reynolds number of 5.0, the flow near a point contacted onto the moving surface resembles heels in shape as shown in Fig.2(a), while the liquid issued from the slot is smoothly led along on the moving surface without a swelling at an extremely low Reynolds number of 0.05.

2. Critical values of the velocity of the moving surface

Fig.3 shows the results of flow for the conditions of (a)Vs/U=1.23 and (b)1.28, the gap D/H=2.5 and the angle $\beta=-30°$ at the Reynolds number of 0.05. The top of each figure displays a flow shape and a pressure distribution, where a positive pressure is shown by solid lines and a negative one is by broken lines, and the bottom shows a time-history of the pressure at a contact point of a flow on the moving belt. The flow shown in Fig.3(a) remain a steady pattern and the pressure is almost constant and keeps always positive from the time of about 10 after an impulsive start. With increasing of the velocity of the belt up to Vs/U=1.28, however, a wetting line and a free surface of a liquid show waving, accompanied with an oscillation of a pressure at the contact point, as shown in Fig.3(b). It is found in this figure that a position of a contact point is unstationary on the

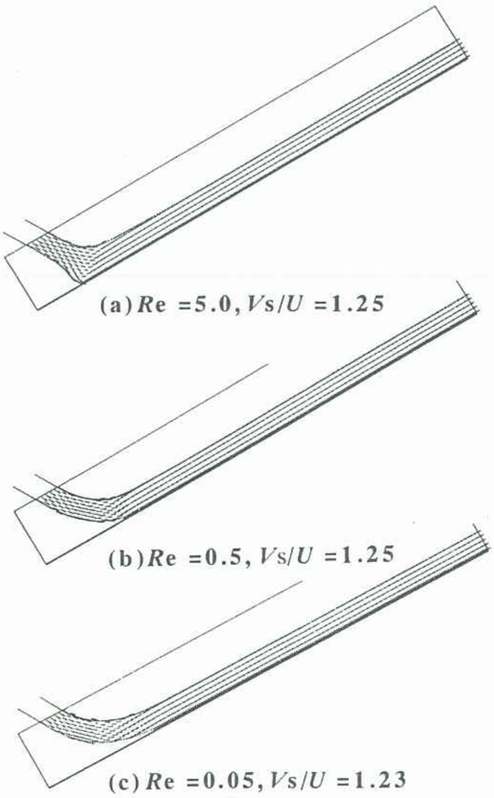
(a) Re =5.0, Vs/U =1.25

(b) Re =0.5, Vs/U =1.25

(c) Re =0.05, Vs/U =1.23

Fig.2 Flow patterns at the Reynolds numbers of 5.0, 0.5, and 0.05, D/H =2.5, $\beta=-30°$

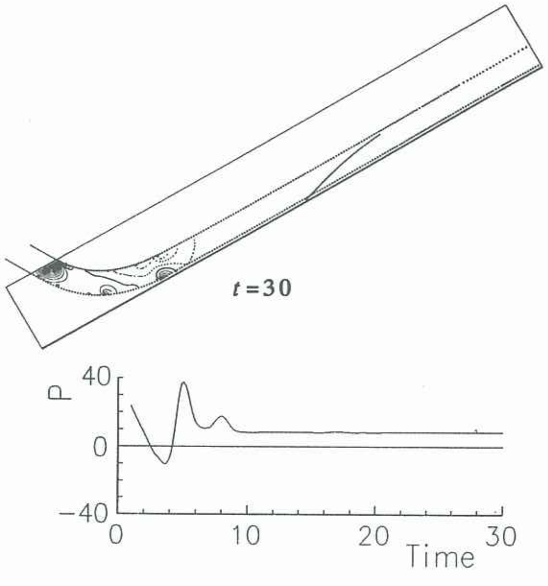

(a) Vs/U =1.23

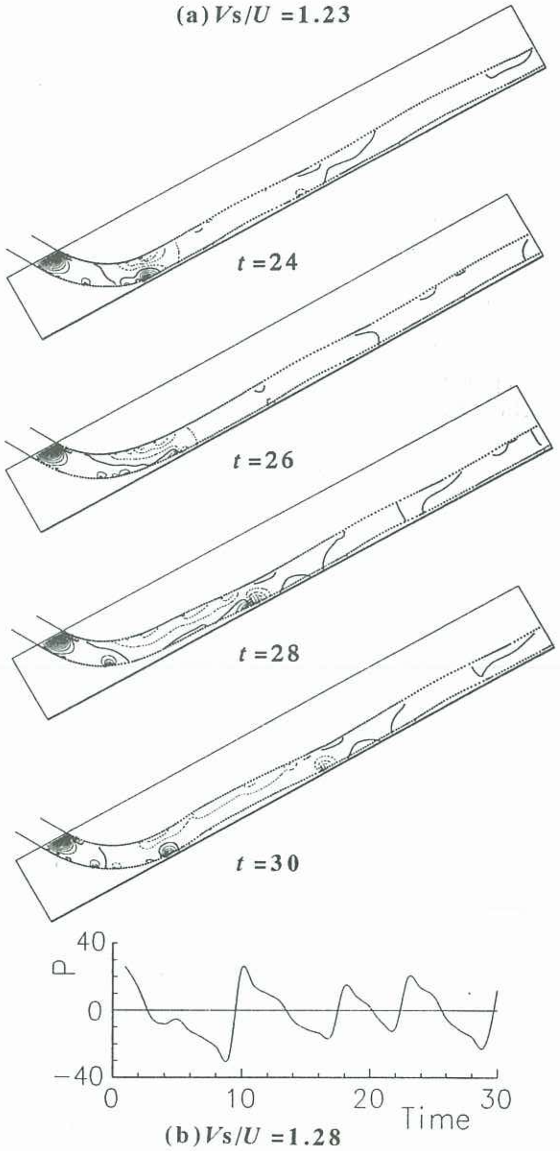

(b) Vs/U =1.28

Fig.3 Flow patterns and the time-history of pressure at a contact point (Re =0.05) D/H =2.5, $\beta=-30°$

moving surface and that the pressure fluctuates with recurring of a positive and a negative values as shown in the curve of a time-history of the pressure. The critical value of the velocity of a moving surface over which the flow of liquid can't keep a stationary pattern is supposed to exist between $Vs/U=1.23$ and 1.28. The flows of $Vs/U=2.65$ and 2.7 at high Reynolds number as $Re=2.5$ are shown in Fig.4. A stationary curtain coating flow can be established for a high belt-velocity of $Vs/U=2.65$ as in Fig.4(a), while an oscillation is observed in the flow pattern of $Vs/U=2.7$.Then the critical velocity of a belt can be estimated to be about 2.7, and the increase of Reynolds number makes a critical value of a belt velocity fast.

3. The effect of a gap-distance between a slot and a moving surface

We show the flows for the Reynolds number of 0.5, $\beta = -30^\circ$ and the gap-distance $D/H=2.0$ and 3.0, as an example of the effects of a gap-distance between a slot and a moving surface, as shown in Fig.5. For the narrow gap, $D/H=2.0$, we can obtain the stationary attached flow at a fast belt-velocity, $Vs/U=1.65$ as shown in Fig.5(a), while we find the flow is waving at a slow belt-velocity, $Vs/U=1.5$ when the gap-distance is widened to $D/H=3.0$ of Fig.5(b). The influence of the gap-distance D/H are summarized for the flows of the Reynolds numbers of (a)0.5 and (b)2.5 in Fig.6, that is, the open circle is for the stationary flow pattern of Fig.5(a) and the solid circle for the oscillating pattern of Fig.5(b), and the critical velocities divide into two stable and unstable regions. It is clear that the narrower gap-distance of D/H makes a curtain coating flow more stable at low Reynolds numbers, although the instability of flow becomes almost independent of the gap D/H at high Reynolds numbers, which agrees qualitatively well with experiments.

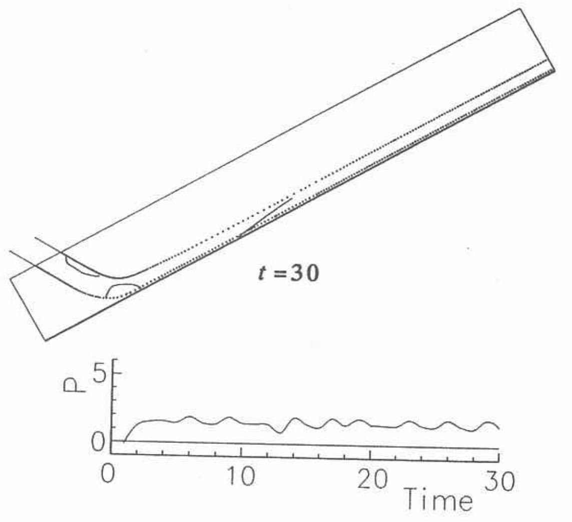

(a) $Vs/U=2.65$

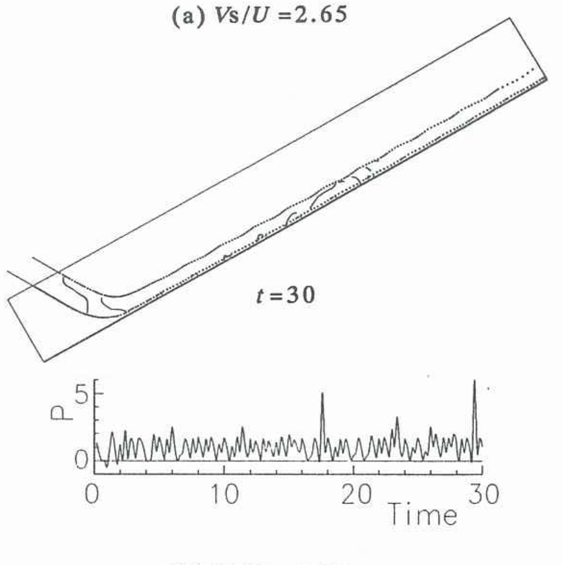

(b) $Vs/U=2.70$

Fig.4 Flow patterns and the time-history of pressure at a contact point ($Re=2.5$) $D/H=2.5$, $\beta=-30^\circ$

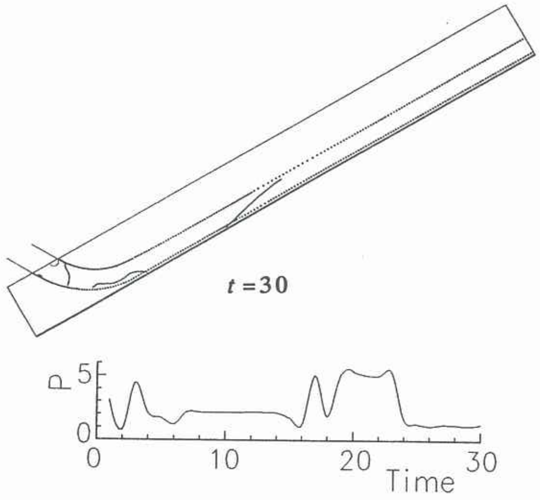

(a) $D/H=2.0$, $Vs/U=1.65$

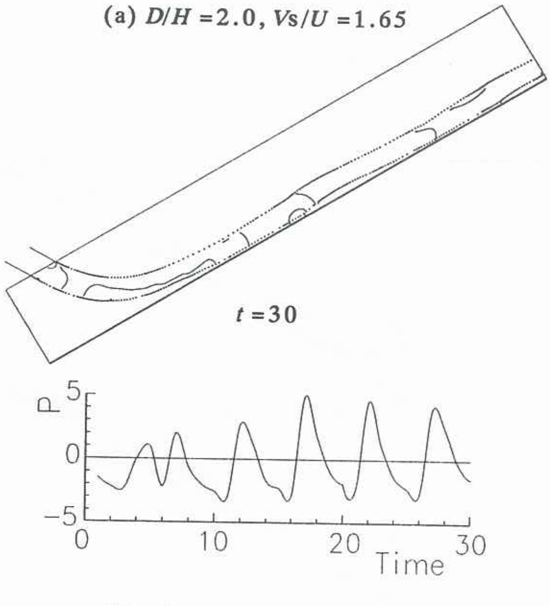

(b) $D/H=3.0$, $Vs/U=1.50$

Fig.5 Flow patterns and the time-history of pressure at a contact point $Re=0.5$, $\beta=-30^\circ$

4. The effects of a setting angle of an issued flow direction

Fig. 7 shows the flows formed when the liquid is fallen down from the slit of the die with the angle of $\beta = 30°$ at the Reynolds number of 2.5 and 0.5. The flow patterns are different from the case of the angle $\beta = -30°$. A heel shaped near the contact point is conspicuously swollen at the Reynolds number of 2.5. Fig. 8 displays the comparison of the mean value of pressure at the contact point for the angle of $\beta = -30°$ and $30°$ at the Reynolds numbers of 2.5, 1.0 and 0.5. The pressures for the angle of $\beta = 30°$ are so higher than these for $\beta = -30°$, which means that the flow for $\beta = 30°$ is more stable.

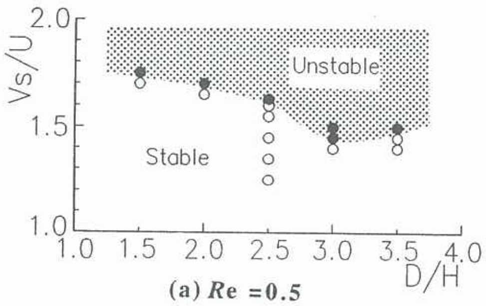

(a) $Re = 0.5$

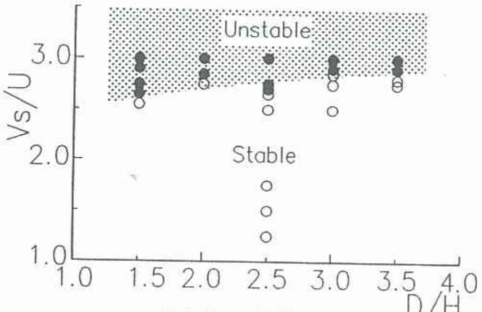

(b) $Re = 2.5$

Fig.6 The region of instability of coating flow
○; stable, ●; unstable

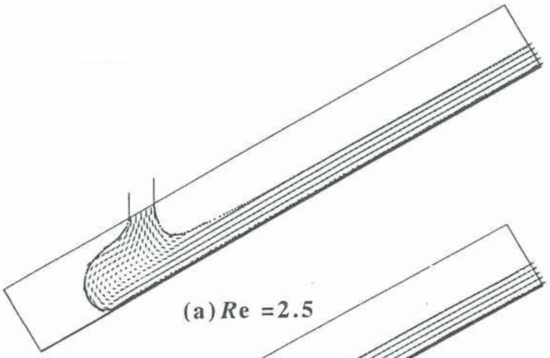

(a) $Re = 2.5$

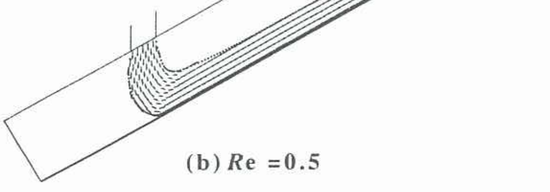

(b) $Re = 0.5$

Fig.7 Flow patterns, $\beta = 30°$, $D/H = 2.5$, $Vs/U = 1.25$, $t = 30$

CONCLUSION

The 2-dimensional and unsteady curtain coating flows of Newtonian liquid are numerically simulated with the MACRL method at the Reynolds numbers of 0.05 to 5.0. A parameter study is carried out to determine the most optimum values of the parameters of design and operation such as the belt-velocity of the moving surface, the angle of the issued liquid and the gap distance. We obtain conclusion as follows.

1. The oscillation of the coating flow can be simulated to occur at the critical values of the surface velocity.
2. The critical values of the surface velocity for the onset of instability of the coating flows is the function of Reynolds number, the angle of the issued liquid and the gap-distance. The effects of these parameters on the coating flows agree qualitatively well with experiments.

REFERENCE

(1) Kistler,S.F.,Ph., Ph.D.Thesis,Univ.Minn.(1984).
(2) Pracht,W.E.,J.Comput.Phys.,7,(1971)pp.46-60.

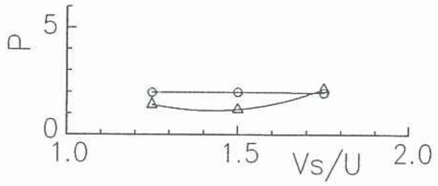

(a) $Re = 2.5$

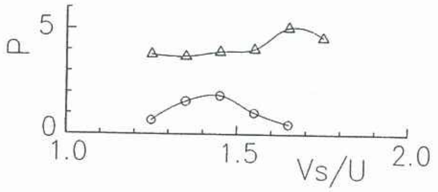

(b) $Re = 1.0$

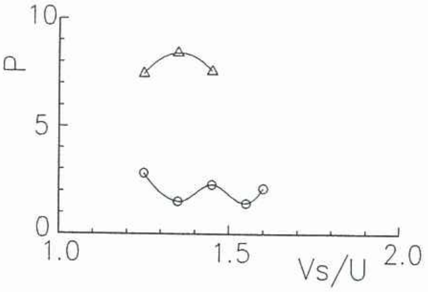

(c) $Re = 0.5$

Fig.8 Pressure at a contact point
○; $\beta = -30°$, △; $\beta = 30°$