11th Australasian Fluid Mechanics Conference
University of Tasmania, Hobart, Australia
14-18 December 1992

THE HYDRODYNAMICS OF PADDLE PROPULSION

P.S. JACKSON, N. LOCKE and P. BROWN

Department of Mechanical Engineering, University of Auckland
Private Bag 92019, Auckland, NEW ZEALAND

ABSTRACT

In 1986 a canoeist using a new style of paddle broke a world race record by a substantial margin, and this new 'wing' blade has subsequently largely replaced the older 'drag' blade in competitive racing. This paper examines propulsion by paddling from first principles in an attempt to explain the success of the wing paddle. This is done using an analytical method which gives an explicit expression for propulsive efficiency to be derived in terms of the paddle dimensions, stroke time and hull drag area. An experimental technique for optimising blade shape and stroke angle is also described, and some typical results given.

Notation for subscripts ; H = hull, B = blade, V = vortex

1 INTRODUCTION

In most forms of paddling propulsion the thrust is generated by the drag on a paddle moving in a direction opposite to the hull motion - this is true of paddle-steamers, ducks and the conventional means of canoe and kayak propulsion, for example. In recent years racing canoeists have evolved a means of propulsion more akin to screw propellers and bird wings, where the thrust is generated primarily by paddle lift rather than paddle drag. This requires not only a paddle of different shape but also a different stroke motion in which the paddle is given a significant velocity normal to the direction of hull travel.

Paddle propulsion generates highly unsteady fluid motion in which both momentum and kinetic energy are transferred to the water by the paddle. The equations for these quantities are easily written in terms of the blade forces and velocity, but the expressions are extremely difficult to evaluate from first principles. This is overcome here in two ways. One is by idealising the fluid motion to suppose that the only effect of the paddle is to generate a vortex ring - the necessary properties of the fluid motion can then derived from the impulse required to generate the vortex. The blade forces and resulting fluid motion may also be studied empirically, and here the challenge is to formulate the problem in such a way that the results of tank tests on the paddles can be interpreted in a meaningful way.

The objective of this work is to explain the gains in speed which can be expected from improvements in the various aspects of canoe paddle design.

Table I : Data for the K1 canoe

max length , L(m)	5.2	total drag, D_H (N)	87
displacement (m^3)	0.093	drag area, A_H (m^2)	0.0078
speed, V_H (m/s)	4.71	stroke time, T (s)	0.55
blade area, A_B (m^2)	0.07	immersion time, Δ(s)	0.35

2 PROPULSIVE EFFICIENCY & BLADE FORCES

2.1 Hull forces

We begin with a general outline of canoes and their typical speeds. Table 1 lists typical data for the K1 canoe (the numeral denoting a single paddler), where the speed shown is that for the 1000m final of the Los Angeles Olympics. Other data are taken from Toro (1986). The total drag on the canoe is made up of friction and wave drag components on the hull, plus an aerodynamic component from the deck and canoeist. The friction and form drags can be reliably estimated using established procedures. Wave drag is best found from towing-tank data, enabling the effects of slenderness and Froude number to be found - the rather meagre evidence available suggests that the wave drag for a K1 is about one quarter of the total. The most convenient way of expressing the total hull drag D_H in terms of its speed V_H is then by means of its drag area A_H, which is defined by the expression

$$D_H = \frac{1}{2}\rho V_H^2 A_H \qquad (1)$$

The values of the drag area given in Table 1 are derived from the analysis in Jackson (1992) ; this area may be regarded as fixed for small changes in speed. Measurements have shown that the hull speed fluctuation is about 5% of the mean, so it is both accurate and convenient to assume that both the hull speed and its total drag force are steady.

2.2 Blade forces and efficiency

The hull drag must be balanced by the mean thrust from the paddles. This can be expressed as follows in terms of the (highly unsteady) lift and drag forces defined in Figure 1 ;

$$D_H = \frac{1}{T}\int_0^{\Delta} (D\cos\theta + L\sin\theta)\, dt \qquad (2)$$

where Δ is the time for which the blade is immersed and T is the total stroke time.

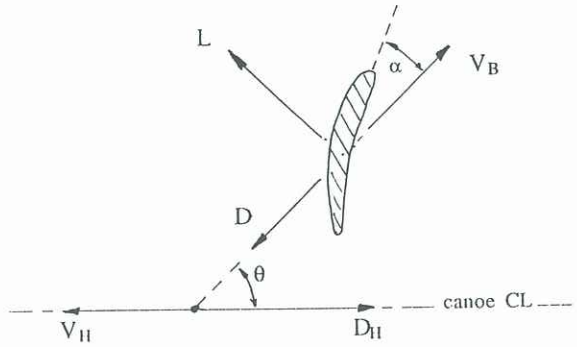

Figure 1. Forces, velocities and angles

Note that the blade velocity has been shown making an angle θ to the hull axis, for reasons which will be explained later. The total rate of working by the paddler is the inner product of the blade force and its velocity relative to the paddler, which taken over one cycle reduces to

$$P = D_H V_H + \frac{1}{T}\int_0^{\Delta} D V_B \, dt \qquad (3)$$

The first term is obviously the rate of work required to overcome hull drag; it is the "useful" component of the total propulsive power. The integral in the second term is the work done by the blade moving at speed V_B relative to the water, and as this energy is not recovered there is (as usual) an inherent inefficiency in the generation of the thrust. This is measured by a propulsive efficiency η such that

$$P = D_H V_H / \eta \qquad (4)$$

Efficient propulsion therefore clearly requires the product of blade drag force and velocity to be small, but this must be achieved subject to equation (2).

Evaluation of the efficiency from (2) and (3) requires a detailed knowledge of the unsteady blade forces. This approach is discussed later, but first we develop a simpler method which considers instead the disturbance left in the water.

3 VORTEX RINGS AND THE WING BLADE

Both laboratory and field observations show that the primary structure in the wake of a blade is a strong U-shaped vortex terminating at each end on the water surface. As both the blade work and impulse during a stroke must result in the appearance of equal energy and impulse in the water, the blade efficiency can be estimated if these quantities can be found for the fluid motion associated with this vortex. This requires knowledge of both the shape of the vortex core and the distribution of vorticity within it, and these may be obtained from the following simple model which approximates the blade wake by a semicircular vortex terminating at the water surface.

The integrated blade force in (2) is just the impulse of the blade force on the water, and must equal the impulse of the vortex. Similarly the integrated blade work in (3) must equate to the energy of the fluid motion in the blade wake. The required properties of this motion may be found from those of a ring vortex derived by Lamb (1945) - the impulse and energy of *half* a ring vortex having a radius R with a small core of radius r and circulation κ are as follows ;

$$I = \frac{\pi}{2}\rho\kappa R^2, \quad E = \frac{(k-1.75)}{4}\rho\kappa^2 R,$$

where $k = \ln(8R/r)$. The vortex circulation κ may now be found in terms of parameters already defined by using (1) and (2). Using the resulting expression for the energy E in (3) and (4) leads to the expression

$$\frac{1}{\eta} = 1 + \frac{k'}{\cos\phi}\frac{A_H}{A_V}\frac{TV_H}{\sqrt{A_V}} \qquad (5)$$

where A_V is the area enclosed by the vortex, ϕ is its direction of motion relative to the hull track, and $k' = 0.10\,(0.33 + \ln(R/r))$.

This expression is of immediate use in demonstrating the important parameters of the blade and stroke. For fixed hull parameters A_H and V_H the effort is seen to be determined solely by the paddle area, the stroke period, the inclination of the ring vortex to the hull track and the intensity of the vortex core. For least effort the aim should clearly be to generate diffuse vortices travelling parallel to the hull as frequently as possible. In the limit this process must form a continuous vortex tube of large area and small wake velocity - exactly as required by the classical theory of fluid propulsion.

The ratio TV_H/R is that of the distance between successive rings to the radius of the rings. It is typically large (about 10), and so there is no need to consider the interaction between the rings (at least for the K1 canoe) which Rayner (1979) found to be necessary in his study of hovering flight. It is evidently advantageous to form a vortex with a more diffuse core (larger r), although this effect is weak ; Saffman's (1970) analysis may be used to extend these results to account explicitly for the distribution of vorticity in the vortex core.

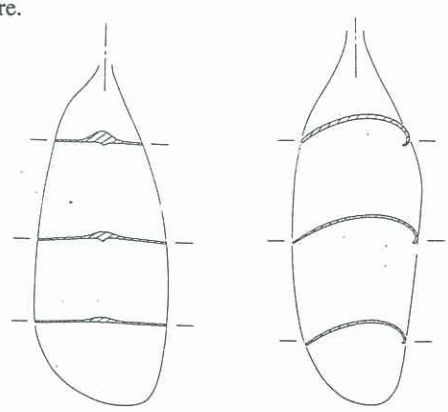

(a) Drag blade (b) Wing blade

Figure 2. Planform and blade sections

The parameter having most influence on the efficiency is obviously the vortex area A_V, but in this regard we find that practitioners of the sport have already anticipated the theory (as so often). The conventional stroke uses a fairly symmetrical 'drag' blade, as illustrated in Figure 2a, which moves along the hull track (so that both θ and ϕ are zero) as in Figure 3a. The flow separates all around the edge of the leading face of the blade, and the resulting vortex sheet rolls up into a vortex of overall dimensions similar to those of the blade planform. In order to find the resulting efficiency from (5) we must first estimate the area bounded by this vortex and the radius of its core. This can be done using Taylor's (1953) solution for the 'dissolving disc' problem, where a disc of radius R_B given an impulsive start to speed V_B is shown to form a circular ring vortex of radius $R = 0.82R_B$ travelling at speed $V_v = 0.44V_B$, and with its vorticity concentrated into a core of radius $r = 0.18R$. It is then necessary to suppose only that a blade is equivalent to a semi-circular disc of the same area, when (5) becomes ;

$$\frac{1}{\eta} = 1 + \frac{0.36}{\cos\phi}\frac{A_H}{A_B}\frac{TV_H}{\sqrt{A_B}} \qquad (6)$$

Numerical values for η are now easily found using values given in Table 1, giving $\eta = 0.72$ for the K1 for example.

However around 1986 a novel 'wing' blade emerged and quickly became accepted as a superior design. The blade is highly asymmetric, as shown in Figure 2b, and in use is given a significant velocity *normal* to the track of the hull as sketched in Figure 3b. The intention is clearly to generate the thrust using blade lift, as well as drag. The blade therefore sheds a starting vortex and a trailing vortex which form a continuous loop , as indicated in Figure 3b the resulting vortex area being much larger than before. If the enclosed area of this vortex is, say, twice the previous area then the efficiency rises to 88% - the wing blade is therefore inherently much more efficient.

This analysis presumes that the vortex formed by the wing paddle lies in a plane normal to the track of the hull. This does not mean that the blade should move in this plane, however, as each part of the shed vortex begins its induced motion as soon as it is formed.The blade must therefore have a equal (backwards) component of velocity in order to keep the

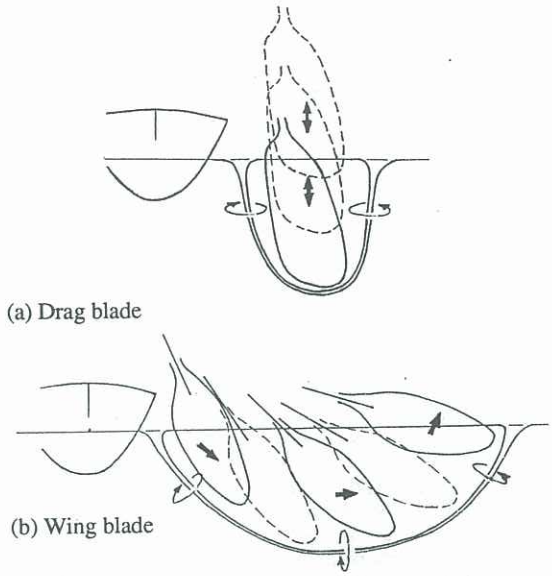

Figure 3. Stroke style for the drag and wing blades

whole vortex in the normal plane - presumably the quicker the vortex is formed (the faster the blade stroke) the less this rearward component need be. It is also presupposed that the vortex wake is the *only* disturbance in the blade wake, whereas in practice there must also be viscous wakes which will further degrade the efficiency. (The Reynolds number of the blades is around 5×10^5).

4 BLADE FORCE MEASUREMENTS

4.1 Fixed stroke angle

The theory presented above is helpful in estimating the propulsive efficiency and the relative importance of the various parameters which affect it, but it offers little guidance regarding the optimum blade shape or stroke angle θ. This is best sought by finding the efficiency by direct measurement of the forces in (1) and (2) for blades of differing shape. Ideally this should be done using field measurements, but as this is not easily accomplished we seek to rewrite the equations leading to (3) in a way which shows how laboratory measurements might be used. In order to do this is it necessary to add the restriction that the blade path through the water is a straight line (so that θ is a constant during a stroke). If then the instantanteous blade forces for a particular blade undergoing a particular stroke have been measured, the blade work can be found (and is then fixed). By altering the angle θ at which the *same* stroke is made relative to the hull different values of hull drag, and therefore hull speed, will be obtained from (2). We can therefore optimise the propulsion in the sense of finding the highest speed for a particular blade making a stroke at a particular angle of attack α. It is readily shown that the best strategy is to orient the stroke such that the resultant of the blade mean drag and lift is directed in the direction of motion of the hull, when

$$\tan \theta_{opt} = \frac{L_{av}}{D_{av}}, \tag{7}$$

where

$$L_{av} = \frac{1}{\Delta}\int_0^{\Delta} L_B dt, \quad D_{av} = \frac{1}{\Delta}\int_0^{\Delta} D_B dt.$$

The corresponding hull drag may then be determined from equation (2), with (1) giving the corresponding hull speed. Finally, equations (3) and (4) shows that the overall propulsive efficiency may then be written in terms of an efficiency factor ξ;

$$\frac{1}{\eta} = 1 + \kappa\xi, \tag{8a}$$

where

$$\kappa = \sqrt{\frac{T}{\Delta}\frac{A_H}{A_B}}, \quad \text{and} \quad \xi = \frac{\sqrt{\frac{\rho A_B}{2}}\,\frac{1}{\Delta}\int_0^{\Delta} D_B V_B dt}{(D_{av}^2 + L_{av}^2)^{0.75}} \tag{8b}$$

The significance of ξ is that it is a dimensionless number which is independent of blade size (if blade forces are proportional to blade area) and therefore should be a function only of the blade shape and of the time history of the stroke speed V_B. The influence of the hull and blade area appear only via the factor κ. If ξ can be determined for a particular blade at any angle of attack we now have a method of choosing the best angle of attack, the corresponding best stroke angle θ_{opt} for that blade, and the resulting hull speed and blade efficiency. The performance of blades of different shape may thus be compared.

Note that if the flow should reach a quasi-steady state in which both lift and drag are proportional to V_B^2, the definition of ξ then shows that its value becomes independent of the stroke duration Δ.

4.2 Experimental measurement of efficiency

In order to find ξ experimentally a laboratory apparatus was constructed for simultaneous measurement of the blade forces and velocity. In practice the blade tip traces out a U-shape, with the rake of the blade varying considerably during the stroke. However here the stroke used is a simple translation, with the blade submerged at a fixed depth.

The principles of the equipment are illustrated in Figure 4. The blade is fixed to a carriage by a cantilever which is straingauged to measure the blade forces in two orthogonal directions, and in such a way that the results are independent of the point of application of the forces. The carriage is propelled along a tank by a large pneumatic cylinder, with a rotating wheel generating pulses for the determination of the carriage velocity. Actuating the piston then swept the blade over a distance of 1.0 m in approximately 0.8 seconds, during which the three variables of interest L_B, D_B, V_B were recorded at 100Hz. Inertial effects were shown to be negligible. Further details of the apparatus may be found in the report by Locke (1991).

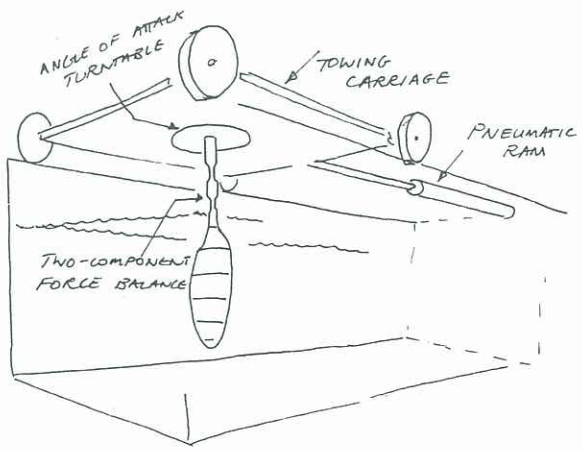

Figure 4. Sketch of the towing-tank apparatus

Although several blades were tested only the two shown in Figure 3 are discussed here. Figure 5 shows the measured drag of the drag blade for a run at 90° angle of attack. This shows a characteristic peak at the start of the motion which is

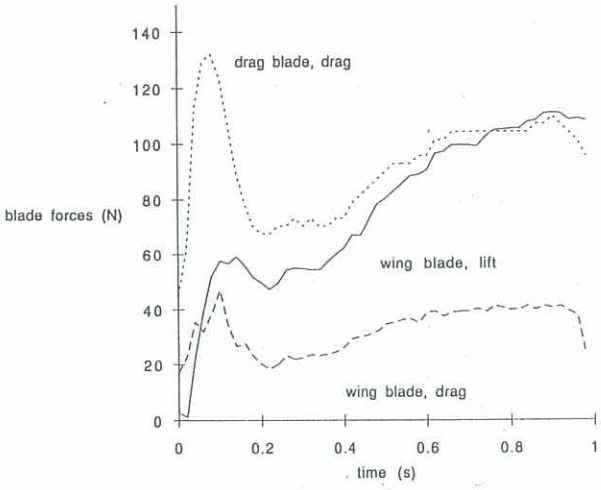

Figure 5. Force measurements on the wing blade

due to the inertia of the surrounding mass of water which must be set in motion with the blade. Since there is no mean lift, the best stroke angle for this blade and stroke would be $\theta = 0^o$.

The figure also shows the lift and drag forces on the wing blade for a run at 20° angle of attack. Both show less pronounced peaks at the start of the motion, and as expected the lift force builds rather more slowly than the drag. After some time the magnitude of the lift force becomes comparable with the drag on the drag blade, and would therefore produce a similar propulsive force to the drag blade if the wing were to move *normal* to the hull track. Because the drag on this blade is much reduced, the mechanical effort required to produce this thrust with the wing blade is correspondingly much less than that for the drag blade.

In calculating ξ from (8b) the most suitable choice for the upper limit Δ is not obvious. In practice the integrals reach a natural limit when the blade leaves the water, but this was not the case in the laboratory simulation. Therefore here we calculate ξ up to every time step Δ, so producing a plot of ξ versus distance travelled for each angle of attack, α.

Figure 6 shows the results for the wing blade for a range of angles of attack . These results again demonstrate the advantage of generating thrust by lift rather than drag, as for any stroke length the best efficiency (least ξ) is obtained using an angle of attack of 20 - 30°. They also show that the best efficiency is obtained in the early part of the stroke, although in order to take advantage of this the stroke length would rather impractically have to be less than 0.2m.

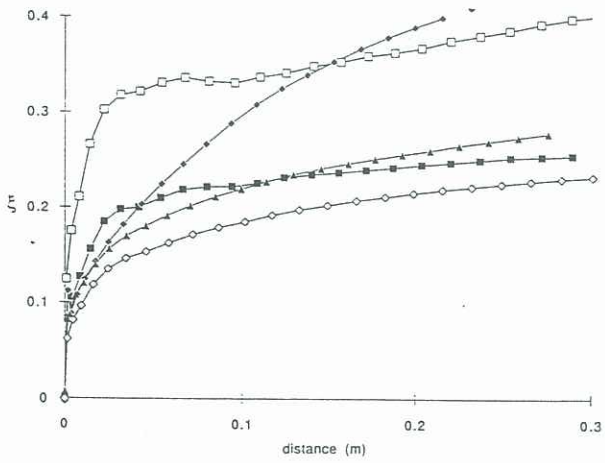

Figure 6. Efficiency factor for the wing blade at various α
($\alpha = 0^o$, □ ; 10°, ■ ; 30°, ◊ ; 50°, ▲ ; 90°, ♦)

From the values given earlier the parameter κ has the value 0.4 for a K1 canoe, and Figure 6 suggests that a typical ξ for the wing blade would be 0.22. Equation (8a) then gives the propulsive efficiency as $\eta = 0.92$, in good agreement with the earlier estimate. The corresponding best (constant) stroke angle θ required for $\alpha = 20^o$ may also be found from the blade measurements using equation (7). The results indicate that the best stroke angle to use with this blade is approximately 65° to the hull (although the apparent angle for the canoeist is of course smaller). At the large angles of attack used by the drag blade it is evident that ξ will be higher, and so less efficient ; with $\xi = 0.4$ for a 90° angle we get $\eta = 0.86$

5 PERFORMANCE OF THE K1 CANOE

As the two methods above give quite good agreement for the efficiency of the two different types of blade we may now estimate the power delivered by each paddler, and the speed increase to be expected from the use of the wing blade. From the data of Table 1, the power required to overcome hull resistance is 410W. Adopting a figure of 0.9 for the efficiency of the wing blade, the *total* propulsive power must be 455W Although the authors are not aware of direct measurements of the power output for canoeing, these are available for other activities like cycling and rowing. Over a 4-minute period the average power output for both these sports is approximately 500W, so our estimate for the K1 is certainly reasonable. When this approach is used for K2 and K4 canoes (having 2 and 4 canoists) very similar estimates are obtained for the specific power output (there is no space for these results here), and this adds to further to confidence in our approach.

Finally, if we suppose that this specific power output is now fixed, the ratio of speeds achieved using the two blades is proportional to the cube root of the ratio of their efficiencies. Adopting a value of 0.8 for the drag blade efficiency then gives a speed advantage to the wing blade of 4%. In practice this advantage must be reduced by other effects neglected here, like viscous and free-surface effects and spray generation, which will degrade the performance of both kinds of blade.

6 CONCLUSIONS

The efficiency of paddle propulsion has been determined by experimental measurements of paddle forces, and by analysis of the disturbance left in the water by the paddle stroke. Both methods show good agreement, and demonstrate the expected superior performance of the wing paddle. The origin of the advantage due to the wing blade has been explained, and a quantitative formula for efficiency derived in terms of the parameters describing the blade stroke. Analysis of the vortex motion generated by the paddle suggests that increasing the stroke rate and vortex area should both produce an improvement in performance.

Acknowledgements

The authors acknowledge the assistance of Ted Kewene and Shane McElroy in collecting the laboratory data. Peter Jackson would also like to thank Ian Ferguson (Olympic gold medallist) for first bringing this problem to his attention.

REFERENCES

JACKSON, P (1992) 'A sensitivity analysis of canoe performance', to appear

LAMB, H (1945) Hydrodynamics, 6th ed, Dover

LOCKE, N J (1991) 'A study of kayak paddle blades', Dept of Mech Eng Rep PME 91:46, Univ of Auckland

RAYNER, J M V (1979) 'A vortex theory of animal flight', J Fluid Mech, 91, 697-730

SAFFMAN, P G (1970) 'The velocity of viscous vortex rings', S.I.A.M J, 49, 371-380

TAYLOR, G I (1953) ' Formation of a vortex ring by giving an impulse to a circular disc and then dissolving it away', J Appl Phys, 24, 104-105.

TORO, A (1986) 'Canoeing : an Olympic Sport', Olympian Graphics